ATEÏS

Public Address - Voice Alarm

Audio Distribution over IP

Commercial Audio

Loudspeakers

Public Address & Voice Alarm

CATALOGUE

EN54 4 EN54 16 CE 12 0359-CDP-0177 0359-CDP-0140

Conforms To UL STD 2572 ETL US Intertek Mass Notification Systems

DELIVERING YOUR MESSAGE

ATEÏS

DELIVERING YOUR MESSAGE

ATEÏS has boosted 30-years of experience in the research, designing, manufacturing and selling the Public Address and Voice Evacuation Systems. Now we introduce a new system that perfectly integrates Fire-Alarm with Voice-Alarm according to EN54-16 (VACIE & FACIE), BS 5839-Part 8 and ISO 7240-16, compliance for large installations with specific purpose.

The IDA8 system is a highly integrated network PA/VA system that complies with current architectural demands and IP and/or fiber-optics networking to cover for any complex design as possible, and the DIVA system is a compact PA/VA solution specifically designed for small to medium scale installations.

INDEX

IDA8 NETWORK PA/VA SYSTEM

ATEÏS STUDIO SOFTWARE

DIVA COMPACT PA/VA SYSTEM

POWER AMPLIFIERS

BATTERY CHARGERS

CONSOLES & ACCESSORIES

IDA8™

PA/VA Controllers

IDA8 is a third-generation modular PA/VA system that complies with current architectural demands requiring IP and/or fiber-optic networking to allow for even the most complex of system designs.

IDA8 responds to Public Address and Voice Alarm requirements as stated in EN54-16, ISO 7240-16, UL60065, UL2572 and BS5839/8, with specific attributes for compliance in large installations.

IDA8C

Networkable PA/VAController – Matrix Mode

IDA8C-SW

Networkable PA/VAController – Switch Mode

Slave Units

IDA8SL

Networkable PA/VA LO-Z Slave Unit - Matrix Mode

IDA8SAB

Networkable PA/VA Slave Unit
A/B zoning - Matrix Mode

IDA8S

Networkable PA/VA Slave Unit – Matrix Mode

IDA8SAB-SW

Networkable PA/VA Slave Unit – Switch Mode

IDA8C

Networkable PA/VA System Controller - Matrix Mode

The IDA8C controller houses advanced audio digital signal processing (DSP), matrix control functions, a digital message player, a fully monitored fireman's microphone and emergency message trigger buttons. IDA8C also supports amplifier monitoring with hot-swap amplifiers and loudspeaker line impedance monitoring. It supports up to four PSS-AS monitored microphone consoles and up to eight monitored amplifiers plus two back-up amplifiers, paging into 8 different zones per unit with A/B detection (BS 5839 part 8). Featuring 8 monitored zones for 25V/70V/100V outputs with simultaneous selection, control inputs, and contact outputs. IDA8C provides the zones and audio in & out expansion of the IDA8 systems, using a secured 48 channel audio and data network over CAT5 or fiber optic, which can be a network of one controller and a maximum up to 31 slave units via ATEÏS local-net, providing with 256 paging zones with priorities (1 ~ 99), satisfying with the most complex PA/VA requirements. The two card slots are provided for either 4 channel 0 dB audio input or 4 channel audio cards. Optional AES/EBU cards are also available.

Each IDA8C input and output channel is fitted with a wide range of pre- and post-processing devices such as volume controllers, routing mixers and switches, priority and paging components, equalizers, compressors, limiters and delay-lines. Digital messaging (G.711, G.722, G.726, G.727 and WAV format) can be stored for live or pre-recorded playback. Digital audio files are uploaded from a computer to the IDA8C through the user-friendly ATEÏS Studio software. Several messages can be played simultaneously into different zones: up to 4 messages from a single IDA8C or a total of 48 messages across an IDA8 system (controller with slaves). One IDA8C can also connect to a maximum up to 31 slave units. The slave units are available as single zone (IDA8S) or with A/B speaker line configurations (IDA8SAB), or for Lo-Z monitoring (IDA8SL). The IDA8C is able to run an impedance scan of all the monitored speaker lines.

The IDA8C operates either on 110 VAC or 230 VAC mains power supply or on a 24V battery power supply for emergency backup, with automatic switch-over. Both power supplies are securely monitored. IDA8C is easily configured using the PC-based ATEÏS Studio software.

FEATURES

- Support a maximum up to 31 slave units in ATEÏS Local-Net
- Up to 256 zones provision via ATEÏS Local-Net
- Up to 8,192 zones provision via ATEÏS Global-Net
- 2 modular I/O card-slots can be 8 IN, 8 OUT, 4IN4OUT
- 4 dedicated and monitored remote ports for paging consoles
- 2 dedicated audio in and outputs for back-up amplifiers
- Loudspeaker line surveillance (short, open, bad impedance) for speaker zone wiring (A/B)
- Simultaneous control and routing of 48 audio channels over dedicated network
- 24 bit, 48k sampling digital A/D converter, 32 bit DSP
- Handle up to 1000W wattage capacity (max.) per zone
- 25/70/100V selectable outputs
- Up to 100m by using STP CAT5/6 cable with NET-C1
- Optional fiber-optic cards for links up to 20 km
- 9 supervised control inputs and 8 control outputs
- Modbus protocol interface via TCP/IP or RS485
- Digital storage for up to 100 minutes in WAV format (16k 16 bit) or 400 minutes in G.722 format of pre-recorded messages
- 4 message players
- Programmable message files, scheduler and events
- DSP functions of PEQ, GEQ, Delays, Ducker, Gate, AGC, feedback, filter, inverter, local echo suppressor, mixer
- Ethernet interface for TERRACOM, 3rd party devices, configuration, control, diagnostics and logging
- Incident data record with at least 800 entries (max. 1300)
- Programmable of 4 user levels
- Telephone interface via SIP protocol or telephone line services
- 1 fault & 1 evac relays outputs
- Programmable 256 priority paging zones with priority (1 ~ 99)
- 2U standard 19" rack mounting
- Export the incident log
- EN54-16 certified, UL listed
- Support to cooperate with RU devices to do the full redundancy

IDA8C

Installation Notes

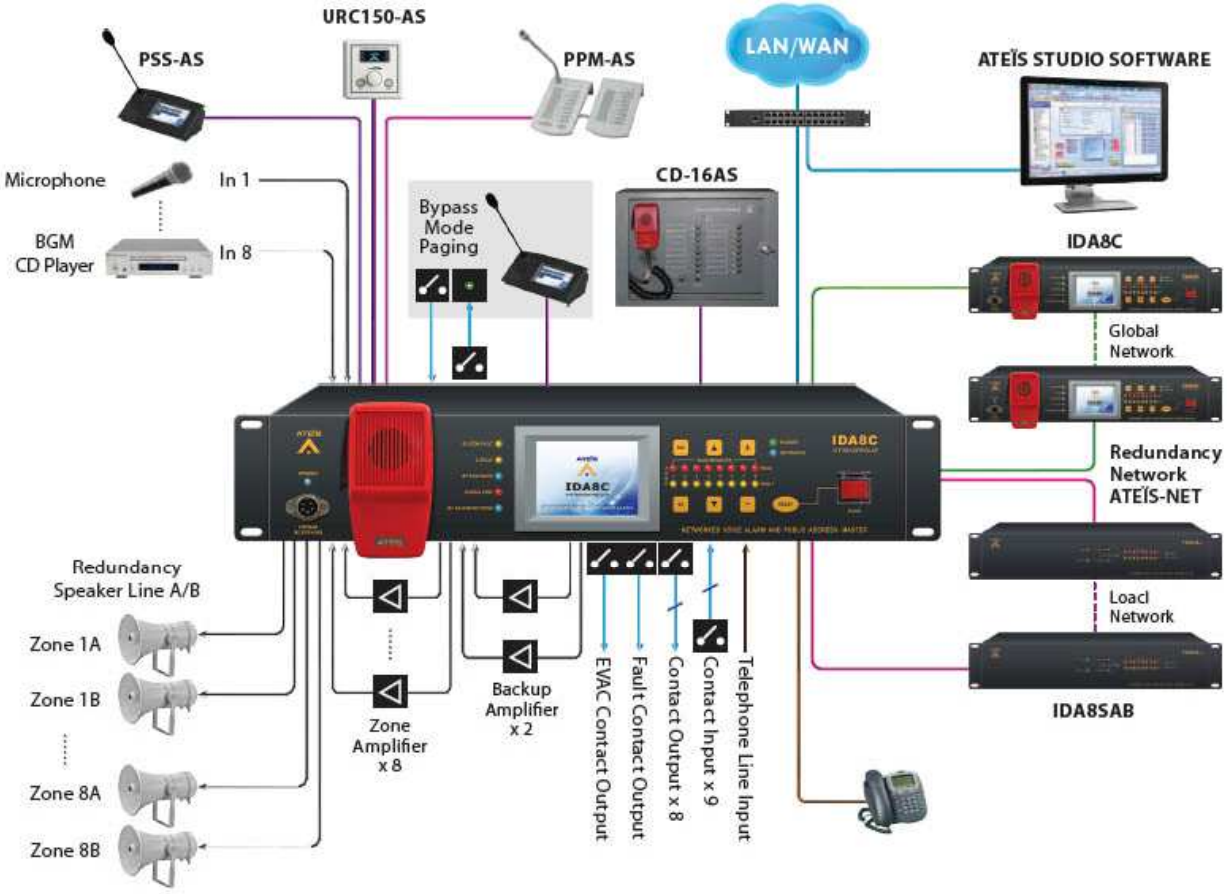

ATEÏS Studio Design Software

SECURITY

In accordance with EN54-16, UL60065, UL2572, ISO 7240-16 and BS5839/8, all IDA8 system components and peripherals are monitored. This monitoring extends from the capsule of a paging station microphone to the end of a loudspeaker line. The external cables connected to the control inputs are monitored for short and open circuit and an internally-generated pilot tone is available for monitoring impedance on the loudspeaker lines.

The system can handle 256 paging zones with priority (1 ~ 99), satisfying with the most complex public address and voice alarm requirements. The controller monitors the status of all the equipment in the system, reports status changes and logs the last 1300 fault messages in the system. The log can be accessed on the front panel display of IDA8C or on PC/Laptop via ATEÏS Studio.

IDA8C

Technical Specifications

CONTROLS AND INDICATORS

- **Front**
  - 3.5" full color touch screen LCD display
  - EVAC/zone selection buttons
  - Fireman microphone
  - Status indicators (power/network/system fault/G.fault bypass mode/global evac/bypass monitoring/fireman microphone running/zone fault/zone evac status)

INTERCONNECTIONS

- **Front**
  - Fireman microphone socket
- **Back**
  - AC power socket
  - 24VDC backup power input
  - Fault/evac/bypass output
  - 9 control inputs
  - 8 control outputs
  - 8 analogue audio mic/line inputs/outputs (optional)
  - Ethernet (100BASE-TX)
  - Local/global network card (optional)
  - 8 amplifier in and outputs
  - 2 connections for backup amplifiers
  - 4 monitored paging console inputs
  - Telephone card (optional)

CERTIFICATIONS AND APPROVALS

Europe	Voice Alarm	EN54-16 certified 2012
		CE - 0359
		according to EN50130-4
Europe	Railway Controller System	EN50121-4
USA	Safety	UL60065

PARTS INCLUDED

Quantities	Components
1	IDA8Cxx controller
1	Fireman microphone
1	Power cord (type depends on region)
1	Set of mounting brackets for 19" rack
1	Set of connectors
1	ATEÏS Studio GUI software
1	LAN cable

ELECTRICAL

- Mains power supply
  - Voltage: 230/115 VAC ±15 %, 50/60 Hz
  - Power consumption: 48W
  - Fuse rating: 1.6A
- Battery power supply
  - Voltage: 18 ~ 30VDC
  - Amp consumption: 1.4A

AUDIO CHARACTERISTICS

- Frequency response: ±1 dB @ 20 Hz and 20 kHz
- Line inputs (optional audio input card)
  - Connector: 3-pin phoenix
  - Frequency response: ±1 dB @ 20 Hz and 20 kHz
  - SNR: > 81 dBA
  - THD: < 0.02 % @ 1 kHz
  - Input sensitivity: 0 ~ 66 dBu/6 dB steps
  - Input impedance: 10k ohm
- Line outputs (optional audio output card)
  - Connector: 3-pin phoenix
  - SNR: > 81 dBA
  - THD: < 0.02 % @ 1 kHz
  - Signal: 0 dB
  - Output impedance: <100 ohm
- Amplifier capacity (per zone): 1,000W (max.)
- Speaker line monitoring
  - < 5 ohm (SHORT)
  - 5 ~ 5,000 ohm (Impedance value)
  - > 5,000 ohm (OPEN)

MECHANICAL

- Dimensions (W x H x D): 486 x 88 x 313 mm (19.1 x 4 x 16.3 inch)
- Weight: 5.36 kg (11.8 lbs)
- Mounting: 19" 2U rack
- Colour: RAL 7016

ENVIRONMENTAL

- Operating temperature: -5 °C ~ +55 °C (+23 °F ~ +131 °F)
- Storage temperature: -40 °C ~ +70 °C (-40 °F ~ +158 °F)
- Relative humidity: 20 % to 95 %
- Air pressure: 600 to 1100 hPa
- Heat dissipation: 153 BTU/hr

CE 12
0359-CDP-0177

IDA8S

EN54 16

Networkable PA/VA Slave Unit - Matrix Mode

The IDA8S slave unit houses advanced audio digital signal processing (DSP), matrix control functions and a digital message player, along with amplifier monitoring for hot-swap amplifiers and loudspeaker line impedance monitoring. It supports up to two PSS-AS monitored microphone consoles and up to eight monitored amplifiers plus two backup amplifiers, paging into 8 different zones per unit with line detection. Featuring 8 monitored zones for 25V/70V/100V outputs with simultaneous selection, control inputs, and contact outputs. IDA8S provides the zones and audio in & out expansion of the IDA8 systems, using a secured 48 channel audio and data network over CAT5/6 or fiber-optic, which can be a network of one controller and a max. up to 31 slave units via ATEÏS local-net. Two card slots can fitted with optional 4 channel analogue audio input/outputs cards (max two cards per device).

IDA8S provides extension of IDA8 system with additional 8 output zones and 2 backup amplifiers. Each input and output channel is fitted with a wide range of pre/post-processing devices such as volume controllers, routing mixers and switches, priority and paging components, equalizers, compressors, limiters and delay-lines. Digital messaging (G.711, G.722, G.726, G.727 and WAV format) can be stored for live or pre-recorded playback. Digital audio files are uploaded from PC to the IDA8S through ATEÏS Studio software. Several messages can be played simultaneously into different zones: up to 4 messages from a single IDA8S or a total of 48 message channels across an IDA8 system (controller with slaves).

The IDA8S operates on a 24VDC power supply. The power supplies is monitored. The IDA8S also supports redundant loop network cabling.

SECURITY

In accordance with EN54-16, ISO 7240-16 and BS5839/8, all IDA8 system components and peripherals are monitored. This monitoring extends from the capsule of a paging station microphone to the end of a loudspeaker line. The external cables connected to the control inputs are monitored for short and open circuit and an internal, generated pilot tone is available for monitoring impedance on the loudspeaker lines. The system can handle up to 256 zones with 1 ~ 99 priorities, satisfying even the most complex public address and voice alarm requirements. The controller monitors the status of all the equipment in the system, reports status changes and logs error details. The log can be accessed from the front panel display of IDA8C on PC/Laptop via ATEÏS Studio.

FEATURES

- Support a maximum up to 31 slave units in ATEÏS Local-Net
- Up to 256 zones provision via ATEÏS Local-Net
- Fully digital with 8 audio inputs and 8 audio outputs
- 2 dedicated and monitored remote ports for paging consoles
- 2 dedicated audio in and outputs for backup amplifiers
- Loudspeaker line surveillance (short, open, bad impedance) for speaker zone wiring
- Simultaneous control and routing of 48 audio channels over dedicated network
- 24 bit, 48k sampling digital A/D converter, 32 bit DSP
- Handle up to 1,000W wattage capacity (max.) per zone
- 25/70/100V selectable outputs
- Up to 100m by using STP CAT5/6 cable with NET-C1
- Optional fiber-optic cards for links up to 20 km
- 9 supervised control inputs and 8 control outputs
- Modbus protocol interface via RS485
- Digital storage for up to 50 minutes in WAV format (16k 16 bit) or 200 minutes in G.722 format of pre-recorded messages
- 4 message players
- Programmable message files, scheduler and events
- DSP functions of PEQ, GEQ, Delays, Ducker, Gate, AGC, feedback, filter, inverter, local echo suppressor, mixer
- Ethernet interface for TERRACOM, 3rd party devices, configuration, control, diagnostics and logging
- Incident data record with at least 800 entries (max. 1,300)
- Programmable of 4 user levels
- 1 fault & 1 evac relays outputs
- Programmable 256 priority paging zones with priority (1~99)
- Export the incident log
- 1U standard 19" rack mounting
- EN54-16 certified
- Support to cooperate with RU devices to do the full redundancy

IDA8S

Technical Specifications

INDICATORS

- **Front**
  - Status LEDs (network/bypass monitoring/bypass mode/G.evac/ system fault/G. fault)
  - Zone LEDs (evac/fault)
  - Power LEDs

INTERCONNECTIONS

- **Back**
  - 24 VDC mains power input
  - Fault/evac/bypass output
  - 9 control inputs
  - 8 control outputs
  - 8 analogue audio mic/line inputs/outputs (optional)
  - 2 local ATEÏS network connections
  - 8 amplifier in and outputs
  - 2 connections for backup amplifiers
  - 2 monitored paging console inputs

CERTIFICATIONS AND APPROVALS

Europe	Voice Alarm	EN54-16 certified 2012
		CE-0359
		according to EN50130-4

PARTS INCLUDED

Quantities	Components
1	IDA8Sxx slave unit
1	110/220 VAC to 24 VDC power adapter
1	Set of mounting brackets for 19" rack
1	Set of connectors

ELECTRICAL

- 24 VDC power supply
  - Voltage: 18 ~ 30VDC
  - Amp consumption: 1.4A

AUDIO CHARACTERISTICS

- Frequency response: ±1 dB @ 20 Hz and 20 kHz
- Line inputs (optional audio input card)
  - Connector: 3-pin phoenix
  - Frequency response: ±1 dB @ 20 Hz and 20 kHz
  - SNR: > 81 dBA
  - THD: < 0.02 % @ 1 kHz
  - Input sensitivity: 0 ~ 66 dBu/6 dB steps
  - Input impedance: 10k ohm
- Line outputs (optional audio output card)
  - Connector: 3 pin phoenix
  - SNR: > 81 dBA
  - THD: < 0.02 % @ 1 kHz
  - Signal: 0 dB
  - Output impedance: <100 ohm
- Amplifier capacity (per zone): 1,000W (max.)
- Speaker line monitoring
  - < 5 ohm (SHORT)
  - 5 ~ 5,000 ohm (Impedance value)
  - > 5,000 ohm (OPEN)

MECHANICAL

- Dimensions (W x H x D): 486 x 44 x 285 mm (19.1 x 1.7 x 11.2 inch)
- Weight: 4.2 kg (9.25 lbs)
- Mounting: 19" 1U rack
- Colour: RAL 7016

ENVIRONMENTAL

- Operating temperature: -5 ºC ~ +55 ºC (+23 ºF ~ +131 ºF)
- Storage temperature: -40 ºC ~ +70 ºC (-40 ºF ~ +158 ºF)
- Relative humidity: 20 % to 95 %
- Air pressure: 600 to 1100 hPa
- Heat dissipation: 126 BTU/hr

CE 12
0359-CDP-0177

IDA8SAB

Networkable PA/VA Slave Unit - A/B Zoning - Matrix Mode

The IDA8SAB slave unit houses advanced audio digital signal processing (DSP), matrix control functions and a digital message player, along with amplifier monitoring with hot-swap amplifiers and loudspeaker line-impedance line monitoring. It supports up to two PSS-AS monitored microphone consoles, up to eight monitored amplifiers plus two backup amplifiers and paging into 8 different zones per unit with A/B line detection (BS 5839-part 8). Featuring 8 monitored zones for 25V/70V/100V outputs with simultaneous selection, control inputs, and contact outputs. IDA8SAB provides the zones and audio in & out expansion of the IDA8 Systems, using a secured 48-channel audio and data network over CAT5/6 or fiber-optic, which can be a network of one controller and a maximum up to 31 slave units via ATEÏS local-net. Two card slots can be fitted with optional 4-channel analogue audio in/output cards 4 channel AES/EBU cards for digital audio in/out.

IDA8SAB slaves units provides extension of IDA8 system with additional 8 output zones and 2 back-up amplifiers. Digital messaging can be stored in the unit for live or scheduled playback. Files are uploaded in G.711, G.722, G.726, G.727 and WAV format from PC using the ATEÏS Studio software. Several messages can be played simultaneously into different zones: up to 4 from a single IDA8SAB or a total of 48 message channels across a full IDA8 system with slaves.

Each input and output channel is fitted with a wide range of pre/post-processing devices such as volume controllers, routing mixers and switches, priority and paging components, equalizers, com-pressers, limiters and delay-lines.

IDA8SAB is easily configured with PC-based ATEÏS Studio software. The IDA8SAB operates either on 110 VAC or 230 VAC mains power or on a 24 VDC power supply for emergency backup, with automatic switchover. Both of the power supplies are monitored.

SECURITY

In accordance with EN54-16, UL60065, UL2572, ISO 7240-16 and BS5839/8, all system components and peripherals are monitored. This monitoring extends from the capsule of a paging station microphone to the end of a loudspeaker line. The external cables connected to the control inputs are monitored for short and open circuit and an internal, generated pilot tone is available for monitoring impedance on the loudspeaker lines. The IDA8SAB supports redundant network cabling as a redundant loop. The system can handle up to 256 zones with priority (1 ~ 99), satisfying even the most complex public address and voice alarm requirements.

FEATURES

- Support a maximum up to 31 slave units in ATEÏS Local-Net
- Up to 256 zones provision via ATEÏS Local-Net
- Fully digital with 8 audio inputs and 8 audio outputs
- 2 dedicated and monitored remote ports for paging consoles
- 2 dedicated audio in and outputs for back-up amplifiers
- Loudspeaker line surveillance (short, open, bad impedance) for speaker zone wiring (A/B)
- Simultaneous control and routing of 48 audio channels over dedicated network
- 24 bit, 48k sampling digital A/D converter, 32 bit DSP
- Handle up to 1000W wattage capacity (max.) per zone
- 25/70/100V selectable outputs
- Up to 100m by using STP CAT5/6 cable with NET-C1
- Optional fiber-optic cards for links up to 20 km
- 9 supervised control inputs and 8 control outputs
- Modbus protocol interface via RS485
- Digital storage for up to 50 minutes in WAV format (16k 16 bit) or 200 minutes in G.722 format of pre-recorded messages
- 4 message players
- Programmable message files, scheduler and events
- DSP functions of PEQ, GEQ, Delays, Ducker, Gate, AGC, feedback, filter, inverter, local echo suppressor, mixer
- Ethernet interface for TERRACOM, 3rd party devices, configuration, control, diagnostics and logging
- Incident data record with at least 800 entries (max. 1,300)
- Programmable of 4 user levels
- Telephone interface via SIP protocol or telephone line services
- 1 fault & 1 evac relays outputs
- Programmable 256 priority paging zones with priority (1 ~ 99)
- Export the incident log
- 2U standard 19" rack mounting
- EN54-16 certified, UL listed
- Support to cooperate with RU devices to do the full redundancy

IDA8SAB

Technical Specifications

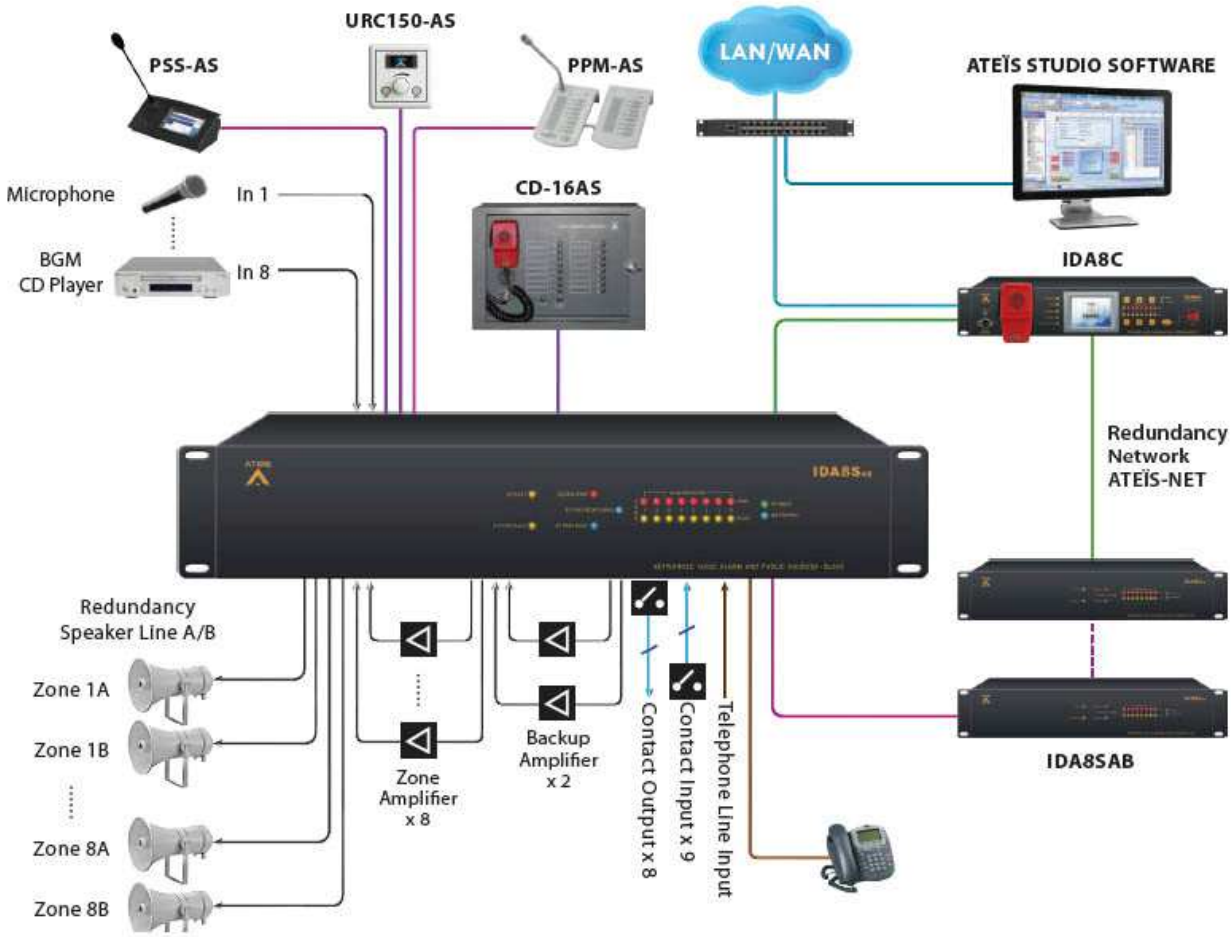

IDA8SAB

Technical Specifications

INDICATORS

- **Front**
  - Status LEDs (network/bypass monitoring/bypass mode/G. evac/ system fault/G. fault)
  - Zone LEDs (evac/fault)
  - Power LEDs

INTERCONNECTIONS

- **Back**
  - AC power socket
  - 24VDC backup power input
  - Bypass mode output
  - 9 control inputs
  - 8 control outputs
  - 8 analogue audio mic/line inputs/outputs (optional)
  - 2 local ATEÏS network connections
  - 8 amplifier in and outputs
  - 2 connections for backup amplifiers
  - Telephone card (optional)
  - 2 monitored paging console inputs

CERTIFICATIONS AND APPROVALS

Europe	Voice Alarm	EN54-16 certified 2012
		CE - 0359
		according to EN50130-4
Europe	Railway Controller System	EN50121-4
USA	Safety	UL60065

PARTS INCLUDED

Quantities	Components
1	IDA8SABxx slave unit
1	Power cord (type depends on region)
1	Set of mounting brackets for 19" rack
1	Set of connectors

ELECTRICAL

- Mains power supply
  - Voltage: 230/115 VAC ±15 %, 50/60 Hz
  - Power consumption: 48W
  - Fuse rating: 1.6A
- Battery power supply
  - Voltage: 18 ~ 30VDC
  - Amp consumption: 1.4A

AUDIO CHARACTERISTICS

- Frequency response: ±1 dB @ 20 Hz and 20 kHz
- Line inputs (optional audio input card)
  - Connector: 3-pin phoenix
  - Frequency response: ±1 dB @ 20 Hz and 20 kHz
  - SNR: > 81 dBA
  - THD: < 0.02 % @ 1 kHz
  - Input sensitivity: 0 ~ 66 dBu/6 dB steps
  - Input impedance: 10k ohm
- Line outputs (optional audio output card)
  - Connector: 3 pin phoenix
  - SNR: > 81 dBA
  - THD: < 0.02 % @ 1 kHz
  - Signal: 0 dB
  - Output impedance: <100 ohm
- Amplifier capacity (per zone): 1,000W (max.)
- Speaker line monitoring
  - < 5 ohm (SHORT)
  - 5 ~ 5,000 ohm (Impedance value)
  - > 5,000 ohm (OPEN)

MECHANICAL

- Dimensions (W x H x D): 486 x 88 x 289 mm (19.1 x 3.5 x 11.4 inch)
- Weight: 5 kg (11 lbs)
- Mounting: 19" 2U rack
- Colour: RAL 7016

ENVIRONMENTAL

- Operating temperature: -5 ºC ~ +55 ºC (+23 ºF ~ +131 ºF)
- Storage temperature: -40 ºC ~ +70 ºC (-40 ºF ~ +158 ºF)
- Relative humidity: 20 % to 95 %
- Air pressure: 600 to 1100 hPa
- Heat dissipation: 140 BTU/hr

CE 12
0359-CDP-0177

IDA8SL

Networkable PA/VA LO-Z Slave Unit - Matrix Mode

The IDA8SL Lo-Z slave unit houses advanced audio digital signal processing (DSP), matrix control functions and a digital message player, along with amplifier monitoring with hot-swap amplifiers and Lo-Z line monitoring. It can support up to two PSS-AS monitored microphone consoles, up to four monitored amplifiers plus one backup amplifier and paging into 4 different zones per unit with line detection. Each input and output channel is fitted with a wide range of pre-and post-processing devices such as volume controllers, routing mixers and switches, priority and paging components, equalizers, compressors, limiters and delay-lines.

IDA8SL slave units provides extension of IDA8 system configuration with an additional 4 output zones and 1 backup amplifier. Digital messaging can be stored in the unit for live or scheduled playback. Files are uploaded in G.711, G.722, G.726, G.727 and WAV format from a computer using the ATEÏS Studio software. Several messages can be played simultaneously into different zones: up to 4 from a single IDA8SL or a total of 48 message channels across a full IDA8 system with slaves. IDA8SL is easily configured with PC-based ATEÏS Studio global software. Once programmed, the system will run independently without a PC connected. The IDA8SL-Slave operates either on 110 VAC or 230 VAC mains power or on a 24VDC power supply for emergency back-up, with automatic switchover. Both of the power supplies are monitored.

SECURITY

In accordance with EN54-16 (pending), UL60065, UL2572, ISO 7240-16 and BS5839/8, all system components and peripherals are monitored. This monitoring extends from the capsule of a paging station microphone to the end of a loudspeaker line. The external cables connected to the control inputs are monitored for short and open circuit and an internally generated pilot tone is available for monitoring impedance on the loudspeaker lines. The IDA8SL Slave supports redundant network cabling as a redundant loop. The system can handle up to 256 zones with 1 ~ 99 priorities, satisfying even the most complex public address and voice alarm requirements.

FEATURES

- Support a maximum up to 31 slave units in ATEÏS Local-Net
- Up to 256 zones provision via ATEÏS Local-Net
- 2 dedicated and monitored remote ports for paging consoles
- 1 dedicated audio in/output for back-up amplifier
- Loudspeaker line surveillance (short, open, bad impedance) for speaker zone wiring
- Simultaneous control and routing of 48 audio channels over dedicated network
- 24 bit, 48k sampling digital A/D converter, 32 bit DSP
- Handle up to 1,500W wattage capacity (max.) for each zone
- 25/70/100V selectable outputs
- Up to 100m by using STP CAT5/6 cable with NET-C1
- Optional fiber-optic cards for links up to 20 km
- 9 supervised control inputs and 8 control outputs
- Modbus protocol interface via RS485
- Digital storage for up to 50 minutes in WAV format (16k 16 bit) or 200 minutes in G.722 format of pre-recorded messages
- 4 message players
- Programmable message files, scheduler and events
- DSP functions of PEQ, GEQ, Delays, Ducker, Gate, AGC, feedback, filter, inverter, local echo suppressor, mixer
- Ethernet interface for TERRACOM, 3rd party devices, configuration, control, diagnostics and logging
- Incident data record with at least 800 entries (max. 1,300)
- Programmable of 4 user levels
- 1 fault & 1 evac relays outputs
- Programmable 256 priority paging zones with priority (1 ~ 99)
- Export the incident log
- 2U standard 19" rack mounting
- UL listed
- Support to cooperate with RU devices to do the full redundancy

IDA8SL

Technical Specifications

INDICATORS

- **Front**
  - Status LEDs (network/bypass monitoring/bypass mode/G. evac/ system fault/G. fault)
  - Zone LEDs (evac/fault)
  - Power LEDs

INTERCONNECTIONS

- **Back**
  - AC power socket
  - 24VDC backup power input
  - Bypass mode output
  - 9 control inputs
  - 8 control outputs
  - 2 local ATEÏS network connections
  - 4 low-impedance amplifier in and outputs
  - 1 connection for backup amplifiers
  - 2 monitored paging console inputs

CERTIFICATIONS AND APPROVALS

Europe	Voice Alarm	EN54-16 certified 2012
		CE - 0359
		according to EN50130-4
USA	Safety	UL60065

PARTS INCLUDED

Quantities	Components
1	IDA8SLxx slave unit
1	Power cord (type depends on region)
1	Set of mounting brackets for 19" rack
1	Set of connectors

ELECTRICAL

- Mains power supply
  - Voltage: 230/115 VAC ±15 %, 50/60 Hz
  - Power consumption: 48W
  - Fuse rating: 1.6A
- Battery power supply
  - Voltage: 18 ~ 30VDC
  - Amp consumption: 1.4A

AUDIO CHARACTERISTICS

- Frequency response: ±1 dB @ 20 Hz and 20 kHz
- Line inputs (optional audio input card)
  - Connector: SPEAKON (electronically balanced)
  - Frequency response: ±1 dB @ 20 Hz and 20 kHz
  - SNR: > 81 dBA
  - THD: < 0.02 % @ 1 kHz
  - Input sensitivity: 0 ~ 66 dBu/6 dB steps
  - Input impedance: 10k ohm
- Line outputs (optional audio output card)
  - Connector: XLR
  - SNR: > 81 dBA
  - THD: < 0.02 % @ 1 kHz
  - Signal: 0 dB
  - Output impedance: < 100 ohm
- Amplifier capacity (per zone): 1,500W (max.)
- Speaker line monitoring
  - < 5 ohm (SHORT)
  - 5 ~ 5,000 ohm (Impedance value)
  - > 5,000 ohm (OPEN)

MECHANICAL

- Dimensions (W x H x D): 486 x 88 x 300 mm (19.1 x 3.5 x 11.8 inch)
- Weight: 4.2 kg (9.25 lbs)
- Mounting: 19" 2U rack
- Colour: RAL 7016

ENVIRONMENTAL

- Operating temperature: -5 ºC ~ +55 ºC (+23 ºF ~ +131 ºF)
- Storage temperature: -40 ºC ~ +70 ºC (-40 ºF ~ +158 ºF)
- Relative humidity: 20 % to 95 %
- Air pressure: 600 to 1100 hPa
- Heat dissipation: 140 BTU/hr

CE 12
0359-CDP-0177

IDA8C-SW

Networkable PA/VA controller - Matrix Mode

IDA8C-SW supports to utilize with a maximum wattage capacity of 1,000W for the 4 audio sources (evac/voice/music/backup) and route them to the zones by the assigned amplifiers, offering a cost effective solution without buying additional amplifiers. Featuring 8 monitored zones for 25V/70V/100V outputs with simultaneous selection, control inputs, and contact outputs. IDA8C-SW provides the zones and audio in & out expansion of the IDA8C-SW systems, using a secured 48 channel audio and data network over CAT5 or fiber-optic, which can be a network of one controller and a maximum up to 31 slave units via ATEÏS local-net, providing with 256 paging zones with priorities (1~99). Furthermore, IDA8C-SW is capable to expand up to 8,192 zones via ATEÏS global-net, satisfying with the most complex public address and voice alarm requirements.

The IDA8C-SW has 4 amplifier channels and is capable to act as a backup amplifier in case other amplifiers break down. In case of evacuation, the zones attenuators will be bypassed automatically and override the sources which are currently under paging. Two card slots are provided for either 4 channel 0 dB audio input or 4 channel audio cards. Optional AES/EBU cards are also available.

IDA8C-SW is capable to run an impedance scan of all the components, covering not only the input paging consoles but the cabling, and processing blocks such as compressors and limiters, delay lines, network and loudspeakers. Digital messaging (G.711, G.722, G.726, G.727 and WAV format) can be stored for live or pre-recorded playback. It stores a reference measurement of the system as users create a given configuration. This reference will be subsequently stored in the system. Any alterations of this configuration will be reported and logged in an event log file as well. The custom setting of threshold shall be applied in it, allowing users to meet each circumstances.

The password protection of software allows you to protect all recorded data file which shall be consulted both on the front LCD display panel and ATEÏS-Studio software (Windows compatible) via the PC. Also, any detected fault shall be signaled by a general fault on the front panel of IDA8C-SW.

IDA8C-SW enhances the abilities to connect with the touch panel microphone consoles (PSS-AS) and programmable contacts. As well as to support the system operation via PC, or 3rd party control such as Crestron or AMX and other control systems.

FEATURES

- Support a maximum up to 31 slave units in ATEÏS Local-Net
- Up to 8,192 zones provision via ATEÏS Global-Net
- Fully digital with 8 audio inputs and 8 audio outputs
- 4 x 1,000 watt maximum load
- 4 channel audio distribution for EVAC, paging, BGM & backup
- Combined back-up amplifier function
- 4 dedicated and monitored remote ports for paging consoles
- Loudspeaker line surveillance (short, open, bad impedance) for speaker zone wiring (A/B)
- Simultaneous control and routing of 48 audio channels over dedicated network
- 24 bit, 48k sampling digital A/D converter, 32 bit DSP
- Up to 100m by using STP CAT5/6 cable with NET-C1
- Optional fiber-optic cards for links up to 20 km
- Modbus protocol interface via TCP/IP or RS485
- Digital storage for up to 100 minutes in WAV format (16k 16 bit) or 400 minutes in G.722 format of pre-recorded messages
- 4 message players
- Programmable message files, scheduler and events
- DSP functions of PEQ, GEQ, Delays, Ducker, Gate, AGC, feedback, filter, inverter, local echo suppressor, mixer
- Ethernet interface for TERRACOM, 3rd party devices, configuration, control, diagnostics and logging
- Incident data record with at least 800 entries (max. 1,300)
- Programmable of 4 user levels
- Telephone interface via SIP protocol or telephone line services
- 1 fault & 1 evac relays outputs
- Programmable 256 priority paging zones with priority (1 ~ 99)
- Export the incident log
- 2U standard 19" rack mounting
- UL listed
- Support to cooperate with RU devices to do the full redundancy

IDA8C-SW

Technical Specifications

CONTROLS AND INDICATORS

- **Front**
  - 3.5" full color touch-screen LCD display
  - EVAC/zone selection buttons
  - Fireman microphone
  - Status indicators (power/network/bypass/monitoring/G. EVAC/G. fault)

INTERCONNECTIONS

- **Front**
  - Firemen microphone
- **Back**
  - AC power socket
  - 24VDC backup power input
  - Fault/evac/bypass output
  - 9 control inputs
  - 8 control outputs
  - 8 analogue audio mic/line inputs/outputs (optional)
  - Ethernet (100 BASE-TX)
  - Local/global network in/out card
  - 4 amplifier inputs and outputs
  - 4 monitored paging console inputs
  - BNC (optional with AES-EBU)
  - Telephone card (optional)

CERTIFICATIONS AND APPROVALS

Europe	Voice Alarm	EN54-16 certified certified (pending)
		CE - 0359
		according to EN50130-4
USA	Safety	UL60065

PARTS INCLUDED

Quantities	Components
1	IDA8Cxx-SW controller
1	Fireman microphone
1	Power cord (type depends on region)
1	Set of mounting brackets for 19" rack
1	Set of connectors
1	ATEÏS Studio GUI software
1	LAN cable

ELECTRICAL

- Mains power supply
  - Voltage: 230/115 VAC ±15 %, 50/60 Hz
  - Power consumption: 48W
  - Fuse rating: 1.6A
- Battery power supply
  - Voltage: 18 ~ 30VDC
  - Amp consumption: 1.4A

AUDIO CHARACTERISTICS

- Frequency response: ±1 dB @ 20 Hz and 20 kHz
- Line inputs (optional audio input card)
  - Connector: 3-pin phoenix
  - Frequency response: ±1 dB @ 20 Hz and 20 kHz
  - SNR: > 81 dBA
  - THD: < 0.02 % @ 1 kHz
  - Input sensitivity: 0 ~ 66 dBu/6 dB steps
  - Input impedance: 10k ohm
- Line outputs (optional audio output card)
  - Connector: 3-pin phoenix
  - SNR: > 81 dBA
  - THD: < 0.02 % @ 1 kHz
  - Signal: 0 dB
  - Output impedance: <100 ohm
- Amplifier capacity (per zone): 1,000W (max.)
- Speaker line monitoring
  - < 5 ohm (SHORT)
  - 5 ~ 5,000 ohm (Impedance value)
  - > 5,000 ohm (OPEN)

MECHANICAL

- Dimensions (W x H x D): 483 x 88 x 305 mm (19 x 3.5 x 12 inch)
- Weight: 6.2 kg (13.65 lbs)
- Mounting: 19" 2U rack
- Colour: RAL 7016

ENVIRONMENTAL

- Operating temperature: -5 ºC ~ +55 ºC (+23 ºF ~ +131 ºF)
- Storage temperature: -40 ºC ~ +70 ºC (-40 ºF ~ +158 ºF)
- Relative humidity: 20 % to 95 %
- Air pressure: 600 to 1100 hPa
- Heat dissipation: 140 BTU/hr

CE 12
0359-CDP-0177

IDA8SAB-SW

Networkable PA/VA Slave Unit - Switch Mode

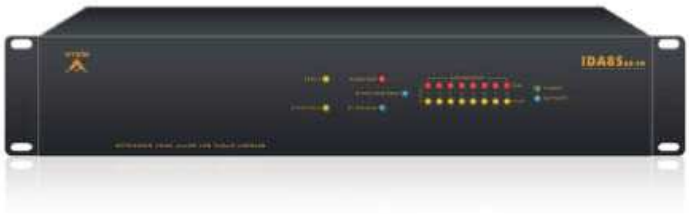

IDA8SAB-SW supports to utilize with a maximum wattage capacity of 1,000W for the 4 audio sources (evac/voice/music/backup) and route them to the zones by the assigned amplifiers, offering a cost effective solution without buying additional amplifiers. Featuring 8 monitored zones for 25V/70V/100V outputs with simultaneous selection, control inputs, and contact outputs. IDA8SAB-SW provides the zones and audio in & out expansion of the IDA8 Systems, using a secured 48 channel audio and data network over CAT5/6 or fiber-optic, which can be a network of one controller and a maximum up to 31 slave units via ATEÏS local-net, providing with 256 paging zones with priorities (1 ~ 99). Two rear card slots can be fitted with optional 4 channel analogue audio in/output cards 4 channel AES/EBU cards for digital audio in/out.

IDA8SAB-SW requires less number of amplifiers with only 4 audio inputs/outputs (evac/voice/music/backup) from amplifier and be capable to act as a backup amplifier in case other amplifiers break down. Users shall manually route the signal and digital messages into the selected zones and adjust the audio level, switch the music (ON/OFF) etc.. In case of evacuation, the zones attenuators will be bypassed automatically and override the sources which are currently under paging.

IDA8SAB-SW slave unit is a user-friendly device which shall be configured via PC-based ATEÏS Studio software (Windows compatible) and password protection to the software allows you to protect your data. Also, any detected fault shall be signaled by a general fault. IDA8SAB-SW enhances the abilities to connect with the touch panel microphone consoles (PSS-AS) and programmable transfer contacts as well as support to operate the system via PC, or 3rd party control such as Crestron or AMX and other control systems. Also any detected faults and alarm status are signaled by general fault and alarm output contacts.

All these features make IDA8SAB-SW the ideal system for shopping malls, hotels, restaurants, museums and many other public places.

FEATURES

- Support a maximum up to 31 slave units in ATEÏS Local-Net
- Up to 8,192 zones provision via ATEÏS global-net
- Fully digital with 8 audio inputs and 8 audio outputs
- 4 x 1,000 watt maximum load
- 4 channel audio distribution for EVAC, paging, BGM & backup
- Combined back-up amplifier function
- 2 dedicated and monitored remote ports for paging consoles
- Loudspeaker line surveillance (short, open, bad impedance) for speaker zone wiring (A/B)
- Simultaneous control and routing of 48 audio channels over dedicated network
- 24 bit, 48k sampling digital A/D converter, 32 bit DSP
- Up to 100m by using STP CAT5/6 cable with NET-C1
- Optional fiber-optic cards for links up to 20 km
- Modbus protocol interface via RS485.
- Digital storage for up to 50 minutes in WAV format (16k 16 bit) or 200 minutes in G.722 format of pre-recorded messages
- Incident data record with at least 800 entries (max. 1,300)
- DSP functions of PEQ, GEQ, Delays, Ducker, Gate, AGC, feedback, filter, inverter, local echo suppressor, mixer
- Ethernet interface for TERRACOM, 3rd party devices, configuration, control, diagnostics and logging
- Programmable message files, scheduler and events
- Programmable of 4 user levels
- Telephone interface via SIP protocol or telephone line services
- 1 fault & 1 evac relays outputs
- Programmable 256 priority paging zones with priority (1 ~ 99)
- Export the incident log
- 2U standard 19" rack mounting
- UL listed
- Support to cooperate with RU devices to do the full redundancy

IDA8SAB-SW

Technical Specifications

INDICATORS
- **Front**
  - Status LEDs (network/bypass monitoring/bypass mode/G. evac system fault/G. fault)
  - Zone LEDs (evac/fault)
  - Power LEDs

INTERCONNECTIONS
- **Back**
  - AC power socket
  - 24 VDC backup power input
  - Bypass mode output
  - 9 control inputs
  - 8 control outputs
  - 8 analogue audio mic/line inputs/outputs (optional)
  - 2 system local-network connections
  - 4 amplifier inputs and outputs
  - BNC (optional with AES-EBU)
  - Telephone card (optional)
  - 2 monitored paging console inputs

CERTIFICATIONS AND APPROVALS

Europe	Voice Alarm	EN54-16 certified certified (pending)
		CE - 0359
		according to EN50130-4
USA	Safety	UL60065

PARTS INCLUDED

Quantities	Components
1	IDA8SABxx-SW slave unit
1	Power cord (type depends on region)
1	Set of mounting brackets for 19" rack
1	Set of connectors

ELECTRICAL
- Mains power supply
  - Voltage: 230/115 VAC ±15 %, 50/60 Hz
  - Power consumption: 48W
  - Fuse rating: 1.6A
- Battery power supply
  - Voltage: 18 ~ 30 VDC
  - Amp consumption: 1.4A

AUDIO CHARACTERISTICS
- Frequency response: ±1 dB @ 20 Hz and 20 kHz
- Line inputs (optional audio input card)
  - Connector: 3-pin phoenix
  - Frequency response: ±1 dB @ 20 Hz and 20 kHz
  - SNR: > 81 dBA
  - THD: < 0.02 % @ 1 kHz
  - Input sensitivity: 0 ~ 66 dBu/6 dB steps
  - Input impedance: 10k ohm
- Line outputs (optional audio output card)
  - Connector: 3-pin phoenix
  - SNR: > 81 dBA
  - THD: < 0.02 % @ 1 kHz
  - Signal: 0 dB
  - Output impedance: < 100 ohm
- Amplifier capacity (per zone): 1,000W (max.)
- Speaker line monitoring
  - < 5 ohm (SHORT)
  - 5 ~ 5,000 ohm (Impedance value)
  - > 5,000 ohm (OPEN)

MECHANICAL
- Dimensions (W x H x D): 483 x 88 x 305 mm (19 x 3.5 x 12 inch)
- Weight: 5.5 kg (12.1 lbs)
- Mounting: 19" 2U rack
- Colour: RAL 7016

ENVIRONMENTAL
- Operating temperature: -5 ºC ~ +55 ºC (+23 ºF ~ +131 ºF)
- Storage temperature: -40 ºC ~ +70 ºC (-40 ºF ~ +158 ºF)
- Relative humidity: 20 % to 95 %
- Air pressure: 600 to 1100 hPa
- Heat dissipation: 140 BTU/hr

APPLICATION EXAMPLE

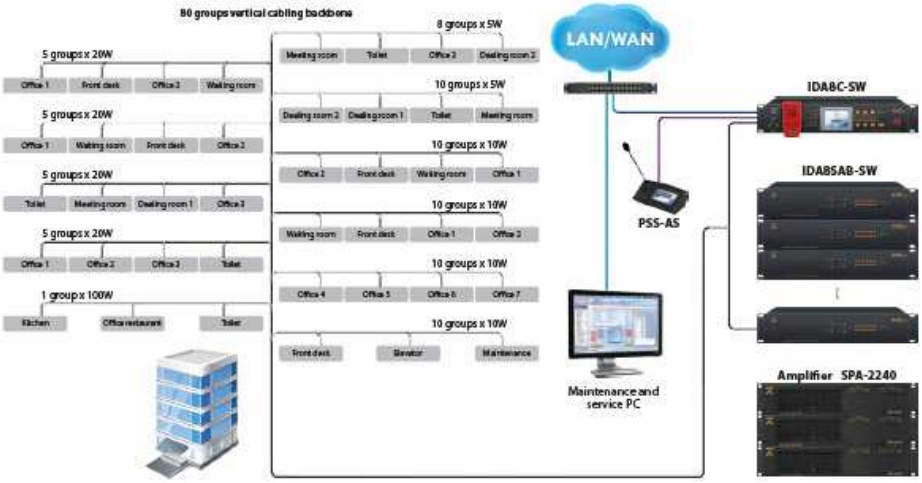

0359-CDP-0177

INSTALLATION EXAMPLES

Equal Mode

Each channel can handle up 1,000W wattage capacity and be supplied for the zones of controller and slave units. Each amp channel has the same wattage capacity, and the system will automatically use the amp channel which is currently available. The 4 sources with the highest priority can use the 4 amp channels.

Unequal Mode

The system divides four channels into two groups and each two channels in a group (evac + backup and voice + music). The sources in priority 1 ~ 20 shall be used by the evac and backup channels; and sources in priority 21 ~ 99 shall be used by the voice and music channels. When the two amplifiers for voice and music channel are being occupied, the available amp for evac and backup channels will also be used for the sources with priority 21 ~ 99.

Backup Sharing Mode

The 9 amplifier channels are supplied for each zone individually, and one backup amplifier channel will act as backup for the 9 amplifiers once they break down.

Equal Mode Configuration

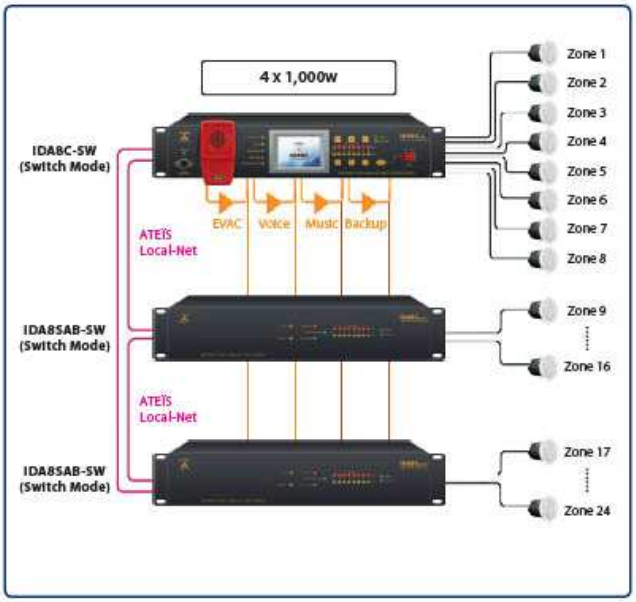

Unequal Mode Configuration

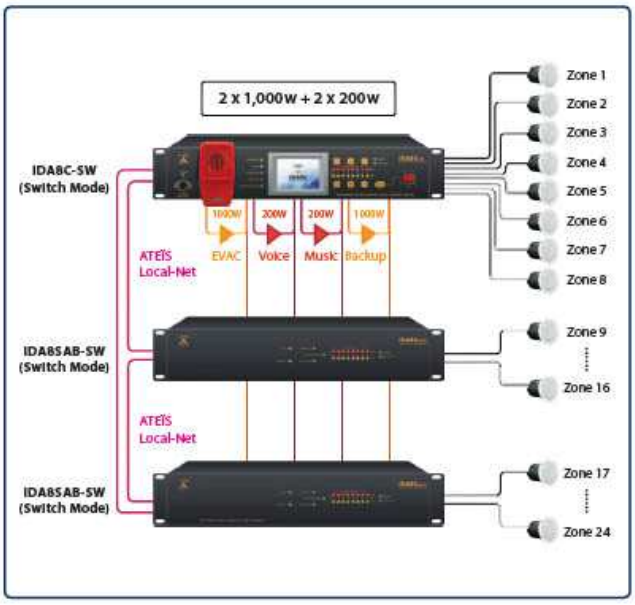

Backup Sharing Mode Configuration

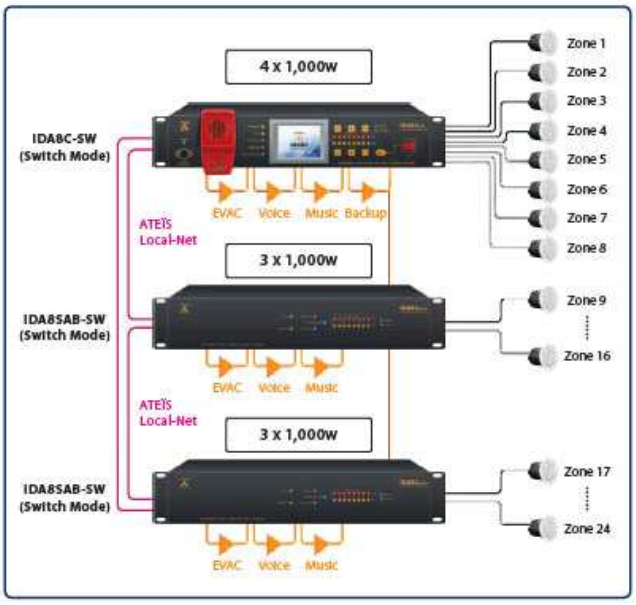

RU-MAIN/RU-CTL/RU-PDC

Full-Redundancy Switching Unit

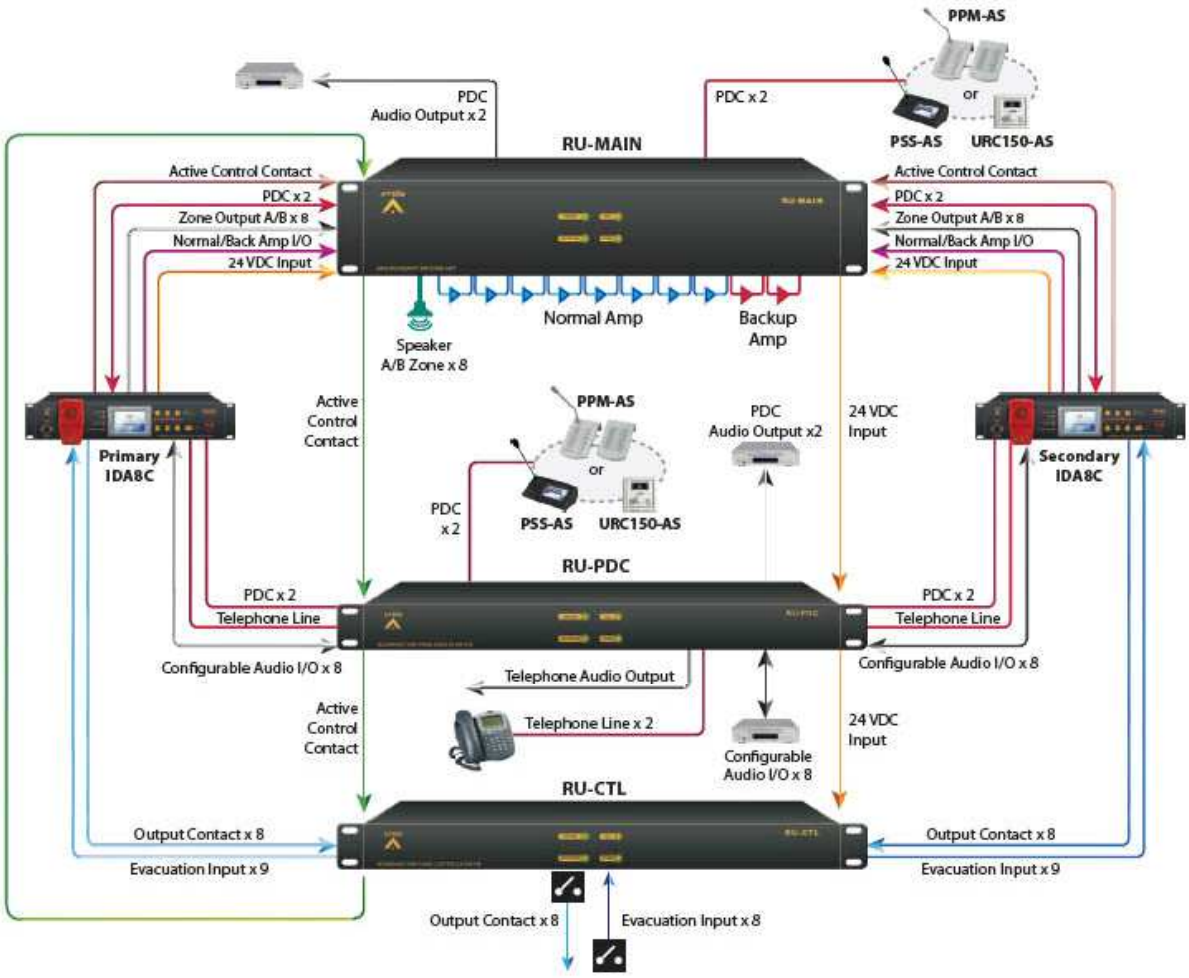

In place of highly sensitive and secured integration such as nuclear power centrals, underground industrial systems or places where people have to thrust on a 100% availability of a PA/VA system may requires additional full-redundancy system. Redundancy is a very widely-spread application that needs to be further specified into a required level of redundancy. Compared to the higher levels of redundancy which requires for A/B wiring of the loudspeaker lines where loss of the A or B line or system still ensures a minimum coverage of 50% of the venue, spare amplifiers and surveillance of essential components in normal PA/VA systems aren't capable to support emergency cases. At this high level of redundancy, not only the amplifiers have redundancy by means of active spare amplifiers, but also the central equipment will provide a full backup. And this is what we call full-redundancy. ATEÏS RU, the thorough switching devices ,providing the high level of redundancy and acting as a Primary/Secondary switching device for IDA8C controller and IDA8SAB slave unit.

- **RU-MAIN**: Switching unit for digital audio processing with paging console interface
- **RU-CTL**: Switching unit for secured input and normal contact output
- **RU-PDC**: Switching unit with audio in/out contacts, paging console & telephone line interface

The IDA8 RU series are designed to provide the reliability of high level of full-redundancy and offer a complete real-time monitoring. RU-MAIN device is in charge of auto switching to primary/secondary devices and re-operate for IDA8C controller and IDA8SAB slave units. If the primary audio processor is active, all signals from peripheral devices shall be directed to the primary audio processor.

RU-MAIN/RU-CTL/RU-PDC

Technical Specifications

RU-MAIN

RU-CTL

RU-PDC

INDICATORS

- **Front**
  - Primary active indicator
  - Secondary active indicator
  - Fault indicator
  - Power indicator

INTERCONNECTIONS

- **RU-MAIN**
  - 8 speaker lines, 8 amplifiers, 2 backup amps, 2 PSS inputs, 2 record out
  - Switching: electrical mechanical relays
  - Switching time: 6 seconds (IDA8 watchdog period)
  - Connections: RJ45, screw terminals blocks
  - LED display: power, primary IDA8 system active, secondary IDA8 system active
  - Control inputs: primary IDA8 system watchdog, secondary IDA8 system watchdog
  - Control outputs: primary IDA8 system active, secondary IDA8 system active, expansion
- **RU-CTL**
  - 8 x output contacts, 9 x alarm inputs
  - Switching: electrical mechanical relays
  - Switching time: 6 seconds (IDA8 watchdog period)
  - Connections: screw terminals blocks
  - LED display: power, primary IDA8 system active, secondary IDA8 system active
  - Control inputs: primary IDA8 system watchdog, secondary IDA8 system watchdog
  - Control outputs: primary IDA8 system active, secondary IDA8 system active, expansion
- **RU-PDC**
  - 8 x 0 dB inputs or outputs , 2 PSS inputs, 2 tel inputs
  - Switching: electrical mechanical relays
  - Switching time: 6 seconds (IDA8 watchdog period)
  - Connections: RJ45, screw terminals blocks
  - LED display: power, primary IDA8 system active, secondary IDA8 system active
  - Control inputs: primary IDA8 system watchdog, secondary IDA8 system watchdog
  - Control outputs: Primary IDA8 system active, secondary IDA8 system active, expansion

PARTS INCLUDED

Quantities	Components
1	RU-xx unit
1	Power cord (type depends on region)

ELECTRICAL

- 24 VDC power supply
  - Voltage: 24VDC
  - Power consumption
    - RU-MAIN: 600 mA
    - RU-CTL: 200 mA
    - RU-PDC: 350 mA

MECHANICAL

- Dimensions (W x H x D)
  - RU-MAIN: 436 x 88 x 150 mm (17.2 x 3.5 x 5.9 inch)
  - RU-CTL/RU-PDC: 436 x 44 x 150 mm (17.2 x 1.7 x 5.9 inch)
- Weight
  - RU-MAIN: 4.5 kg (10 lbs)
  - RU-CTL/RU-PDC: 2.5 kg (5.5 lbs)
- Mounting
  - RU-MAIN: 19" 2U rack
  - RU-CTL/RU-PDC: 19" 1U rack
- Colour: RAL 7016

ENVIRONMENTAL

- Operating temperature: -5 ºC ~ +55 ºC (+23 ºF ~ +131 ºF)
- Storage temperature: -40 ºC ~ +70 ºC (-40 ºF ~ +158 ºF)
- Relative humidity: 20 % to 95 %
- Air pressure: 600 to 1100 hPa
- Heat dissipation
  - RU-MAIN: 50 BUT/hr
  - RU-CTL: 16 BUT/hr
  - RU-PDC: 28 BUT/hr

NET-CX

ATEÏS Net Secured Audio Network Card

*Port A = network IN
*Port B = network OUT

NET-C1, RJ45 (A) - (B)

NET-C2, Fiber Optic Multi Mode (A) - RJ45 (B)

NET-C3, Fiber Optic Multi Mode (A) - (B)

NET-C4, RJ45 (A) - Fiber Optic Multi Mode (B)

NET-C2S, Fiber Optic Single Mode (A) - RJ45 (B)

NET-C3S, Fiber Optic Single Mode (A) - (B)

NET-C4S, RJ45(A) - Fiber Optic Single Mode (B)

ATEÏS Net™ is a secured (monitored) audio network, developed and supplied for fast and low-latency audio and data transport over a redundant copper via STP CAT5/6 or fiber-optic network ring. ATEÏS Net™ has an open-architecture design providing the best solution to medium to large-scale installations, such as shopping malls, retail stores, train stations and airports.

ATEÏS Net™ secured audio network responds to Public Address and Voice Alarm requirements as stated in EN54-16, UL60065, UL2572, ISO 7240-16 and BS5839/8, with specific attributes for compliance in large installations.

ATEÏS Net™ is able to simultaneously transport 48 audio channels (32 bit, 48k Hz sampling rate) with a latency <1 ms together with the necessary control data over a STP CAT5/6 or fiber-optic network. For LOCAL and GLOBAL system networking, optional ATEÏS Net™ networking cards can be installed into the IDA8 controller and slave units. Thanks to its loop architecture, the ATEÏS Net™ audio network is fully redundant. When a fault (line open or shorted) occurs on a loop segment, it will be automatically isolated without affecting the entire system functionality. ATEÏS global-net, can be a network of more than one controller (matrix mode and switch mode) and a maximum up to 31 IDA8Sxx slave units (matrix mode and switch mode) in a local system.

As network addresses are auto negotiated, network setup is very easy. Once programmed, the system will operate independently without connecting to a PC having to be connected. 32 IDA8 system units can be a network in ATEÏS Global-Net, and each system includes one control unit connecting to 31 slave units in ATEÏS Local-Net.

The installation of NET-C1 cards (RJ45 to RJ45) are suitable with a maximum distance up to 100m between matrix and slave unit or slave and slave unit. For longer installation distances, optional NET-C2, C3 or C4 can be used to extend distances with fiber-optic, up to 2 km between units in multi-mode or 20 km in single-mode.

SECURITY

In accordance with EN54-16, UL60065, UL2572, ISO 7240-16 and BS5839/8, all IDA8 system components and peripherals on the ATEÏS Net™ secured audio network are monitored and reports stored in the IDA8C system controller. The controller monitors the status of all the equipment in the system, reports status changes and stores fault messages for recall either on the controller front-panel display or through the ATEÏS Studio PC-based software.

FEATURES

- ATEÏS Net™ audio and data secured network
- Local-net & global-net
- 32 x 32 IDA8 system units in a global network
- Low-latency < 1 ms
- 48 audio channels
- Redundant loop architecture
- 32 bit, 48 kHz sampling
- STP CAT5/6 for up to 100m
- Fiber-optic multi-mode for up to 2 km
- Fiber-optic single-mode for up to 20 km
- Dedicated network
- EN54-16 certified

NET-CX

Technical Specifications

INDICATORS
- **Front**
  - Data running indicator
  - Network present indicator

INTERCONNECTIONS
- **Front**
  - Two system network connections either STP CAT5/6 or fiber-optic or a combination

CERTIFICATIONS AND APPROVALS

Europe	Voice Alarm	EN54-16 certified 2012
		CE-0359
		according to EN50130-4

PARTS INCLUDED

Quantities	Components
1	ATEÏS Net™ secured audio network card
1	Set of interconnecting ribbon cables
1	Set of mounting pillars

ELECTRICAL
- Battery power supply
  - Voltage: Internal multi-power socket
  - Power consumption: 5W

AUDIO CHARACTERISTICS
- Frequency response: 20 Hz ~ 22 kHz
- Sampling rate: 32 bit/48k Hz
- Latency: < 0.08 ms per node
- Integrity assurance: watchdog

- Center wavelength (fiber-optic)
  - Multi-mode: 1,300 nm
  - Single-mode: 1,310 nm
- FO connector type
  - Straight tip
- FO cable baud rate
  - 62.5 um (multi-mode)
  - 9 um (single-mode)
- Indicators
  - LED: Network active
  - LED: Network present

MECHANICAL
- Dimensions (W x H x D): 100 x 18 x 150 mm (3.9 x 0.7 x 5.9 inch)

ENVIRONMENTAL
- Operating temperature: -5 ºC ~ +55 ºC (+23 ºF ~ +131 ºF)
- Storage temperature: -40 ºC ~ +70 ºC (-40 ºF ~ +158 ºF)
- Relative humidity: 20 % to 95 %
- Air pressure: 600 to 1100 hPa

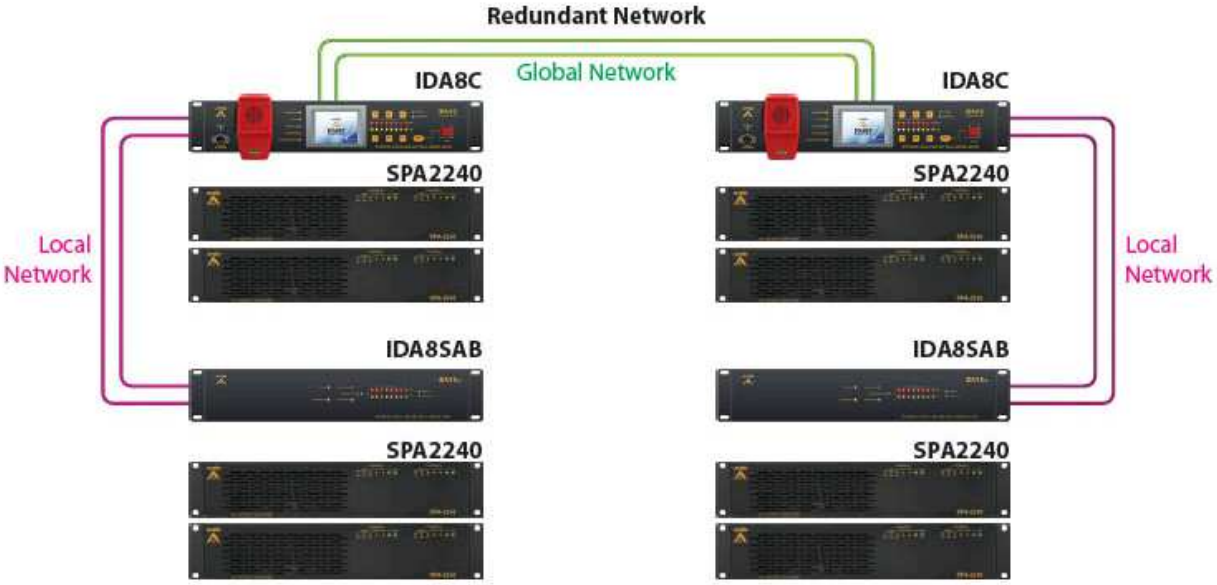

ATEÏS Local-Net and Global-Net

CE 12
0359-CDP-0177

Optional Cards

Input Audio Card

AES/EBU Card

Mono Input/Output, Stereo Input/Output
Duplex Stereo

Telephone Card

Analog Audio I/O Cards

Analog audio cards are available for local inputs or outputs in blocks of 4 or in a 2 in/2 out configuration. Highly adjustable for sensitivity and output power. An outstanding design with the maximized flexibility by providing with true 48V phantom power for each card.

- 4 channels of analog audio inputs
- 3 pin euro block
- 0, 12, 24, 40, 54 dB sensitivity levels
- Signal, RTO, overload indicators
- 48V phantom power
- -60 to 20 dB for level
- -50 to 20 dB overload threshold
- Mute and bypass signal control
- Volume display for each channel
- RoHS compliant

Output Audio Card

- 4 channels of analog audio outputs
- 3 pin euro block
- Signal, overload indicators
- -60 to 20 dB fiber range for level
- -20 to 20 dB overload threshold
- Mute and bypass signal control
- Volume display for each channel
- RoHS compliant

Digital Audio I/O Cards

The digital audio I/O cards allow you to go all the way to digitize, presenting with the maximum sound quality and transmission distance on IDA8 platform. Digital cards enhance a higher capacity of input & output configuration with up to 8 channels in and 8 channels out on a single card.

- Mono input/output: 4 channels audio input and 4 channels output of digital audio
- Stereo input/output: 2 channels audio input (2 x 2) and 2 channels output of digital audio (2 x 2)
- Duplex stereo (2 CH for each channel): 4 channels audio input (1, 2 CH) and 2 channels outputs of digital audio (3, 4 CH)
- 3 pin euro block
- RTO/overload/signal Indicators
- -20 to 20 dB for overload threshold
- -60 to 20 dB fiber range of level
- Level control
- Volume display for each channel
- Mute and bypass control
- Digital transmission can be reach 100 meter
- RoHS compliant

Specialty Cards

How can a multi-project integrate in both PA/VA system and conference rooms? By adding the telephone card to achieve the teleconferencing capabilities on IDA8 system.

- Initiate outgoing calls
  - DTMF tone dialing
  - Speed-dialing
  - Redial
  - Flash (3-way telephone conversation)
- Manual or auto answer incoming call (optional N times)
- Touch-tone decoding
- Caller ID reception
- Disable hang up sound/noise suppression/ line echo cancellation/voice enhance signal control
- Continuous line status and fault monitoring
- Mute and level control for caller voice and ring tone
- Various way to control telephone module
  - Control signal from logic components
  - External keypad remote controller
  - Software control panel
  - 3rd party command via RS232 or Ethernet
- Extensive customization options and parameters
- RoHS compliant

Ordering Information

Model Number Combination

Main	Option 1		Option 2		Option 3		Option 4
IDA8C-	Audio Card	+	Specialty Card	+	Local Net Card	+	Global Net Card
IDA8C-SW-	Audio Card	+	Specialty Card	+	Local Net Card	+	Global Net Card
IDA8SAB-	Audio Card	+	Specialty Card	+	Local Net Card		N/A
IDA8SAB-SW-	Audio Card	+	Specialty Card	+	Local Net Card		N/A
IDA8S-	Audio Card	+	N/A	+	Local Net Card		N/A

Audio Card

A	Digital I/O
2A	Digital I/O x 2
I	4 CH Mic/Line Input
O	4 CH Line Output
2I	8 CH Mic/Line Input
2O	8 CH Line Output

Specialty Card

T	Phone Card

Local Net Card

L1	RJ45 (A) - (B)
L2	Fiber-optic Multi Mode (A) - RJ45 (B)
L2S	Fiber-optic Simple Mode (A) - RJ45 (B)
L3	Fiber-optic Multi Mode (A) - (B)
L3S	Fiber-optic Single Mode (A) - (B)
L4	RJ45 (A) - Fiber-optic Multi Mode (B)
L4S	RJ45 (A) - Fiber-optic Simple Mode (B)

Global Net Card

G1	RJ45 (A) - (B)
G2	Fiber-optic Multi Mode (A) - RJ45 (B)
G2S	Fiber-optic Simple Mode (A) - RJ45 (B)
G3	Fiber-optic Multi Mode (A) - (B)
G3S	Fiber-optic Single Mode (A) - (B)
G4	RJ45 (A) - Fiber-optic Multi Mode (B)
G4S	RJ45 (A) - Fiber-optic Simple Mode (B)

Model Example 1

IDA8C-2OL1G3S

2O: 8 CH Mic/Line Audio Input

L1: Local Net Card - RJ45 (A) - (B)

G3S: Global Net Card - Fiber-optic Single Mode (A) - (B)

Model Example 2

IDA8SAB-SW-TL4S

L4S: RJ45 (A) - Fiber-optic Single Mode (B)

IDA8 REDUNDANT SWITCHING UNIT

RU-MAIN: Redundancy Switcher

RU-CTL: Redundancy Switcher

RU-PDC: Redundancy Switcher

In cooperation with RU devices for redundancy purpose, please refer to our local sales for:

- External DC power calculation for IDA8S
- Special order for IDA8C, IDA8C-SW, IDA8SAB and IDA8SAB-SW

ATEÏS Studio

Integrated operation Software

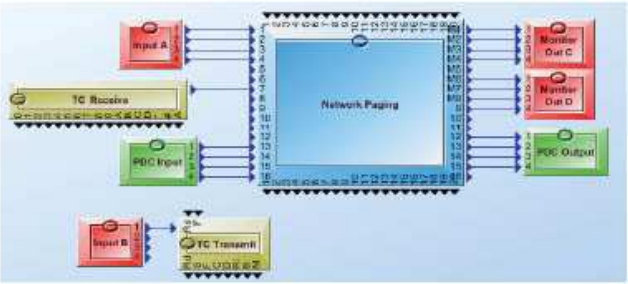

ATEÏS Studio is a user-friendly graphic user interface designed for intuitive system setup. The PC-based software allows hardware update, full system configuration and generates the user interface for day-to-day system operation.

GRAPHICAL USER INTERFACE

ATEÏS Studio allows complete PA/VA or audio systems incorporating a range of devices to be configured, monitored and controlled centrally from a single user interface. ATEÏS Studio supports all IP-based products within the ATEÏS product family such as IDA8 PA/VA system, LAP-G2T and ECS audio system. The software enables a comprehensive overview of the system and its virtual connections and also offers control and device configuration for IDA8 controllers and slave units, paging consoles and remotes such as PSS-AS, CD-16AS and URC-150AS devices.

DIAGNOSING

ATEÏS Studio monitors, controls, logs and reports a range of events. The whole system configuration preset can be stored and reloaded at the press of a button. Users can tailor design the elements of the graphic user interface or control panels, as well as program the schedulers and events and create different user levels for security and management.

BUILDING

ATEÏS Studio provides a complete set of tools and building blocks for real-time control and monitoring. Detailed information such as signal levels, loudspeaker impedance, pre-recorded messages, amplifier conditions and other parameters can be monitored in real-time.

A comprehensive library of tools, control and monitoring elements is provided along with the GUI, including items such as volume control faders, metering, high-level EQ, compression, limiting, auto-gain, noise sensing, mixing, shortcut buttons and display elements. Element behavior can be fully tailored to suit each application. Built-in file transfer software transfers both data and audio files from the PC to the network controller.

ACCESS LEVELS

Additional security can be added to the software with password-protected layers according to EN54-16. Multiple users can be created and assigned, each with a unique password and access to specific layers of the GUI.

FEATURES

- Runs on Windows
- Assignable access levels with rights management
- All system and unit parameters can be configured
- Easy navigation
- Drag & drop features
- Real-time monitored

DIAGNOSTIC AND LOGGING SOFTWARE

- Call, fault and general event logging
- On-line logging function
- Historical logging
- Event display priority can be changed
- Password-protected

FILE TRANSFER SOFTWARE

- PC-based application
- Supplied together with the network controller
- Creation of message sets
- Off-line configuration

ATEÏS Studio Software Version

Version 1.X.X.XX for ATEÏS Local-Net
Version 3.X.X.XX for ATEÏS Global-Net

ATEÏS global-net System

ATEÏS global-net can be a network of more than one controller (matrix mode and switch mode) and a maximum up to 31 IDA8Sxx slave units (matrix mode and switch mode) in a local system.

ATEÏS Studio

Digital Signal Processing

Drag & Drop

To design the system configuration including hardware connection, signal paths for each device, DSP components etc., simply Drag & Drop and items/components into the design window, providing easy-to-use and real-time modification.

VoIP

The IDA8 system supports VoIP based on SIP protocol and Audio over IP applications by using PPM-IT5 paging console which makes an ideal and simple solution to intercom, 3rd party control and paging to IDA8 system over LAN/WAN.

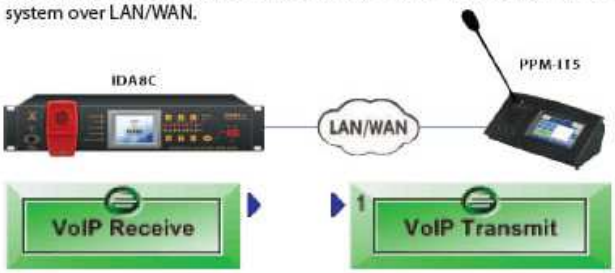

Auto Mixer

This component mixes several source signals and route the signals to one output. The activation of channel(s) can be done manually/automatically by a signal and the priority.

The Auto Mixer can be used to adjust the level of signal output based on the number of activated input channels.

Feedback

The feedback component analyzes and detects the feedback source and adaptively attenuates the responsible frequency. There are 4 types of feedback components which are corresponded to the numbers of filters (4, 8, 12 or 16) that the feedback will use.

Auto Noise Gain (A.N.G.) /DNM

The A.N.G and DNM component is used to dynamically adjust the audio levels depending on the detected ambient noise. The ambient noise can be measured by NSM and DNM-485/ENET noise sensing microphone.

Page Control

Some PA/VA applications require a huge number of zones for paging. It needs to be done by installing multiple ATEÏS audio processors (matrix mode and switch mode) via ATEÏS Net. The Network Paging component provides the capabilities of routing the input source signal to zones and each source can specify which zone wants to page by its priority value.

Telephone Card

The Telephone Card component is based as a traditional land line phone which manages the telephone calls for IDA8 system. The telephone card component consists of a TC transmit component and a TC receive component, providing dial, receive, detect the logic signal response of DTMF status.

DIVA™

DIVA System

DIVA system is a compact PA/VA solution specifically designed for small to medium-scale installations. It has all the essential functionality to comply with EN-54 requirements for Voice Alarm, including full system monitoring, loudspeaker line impedance surveillance, microphone surveillance and monitored interfacing with remote devices. The DIVA system responds to Public Address and Voice Alarm requirements as stated in EN54-16, ISO 7240-16 and BS5839/8, with specific attributes for compliance in large installations.

DIVA-8MG2

Compact PA/VA Controller

DIVA-8S

Compact PA/VA Slave Unit

DIVA-8MG2

EN54 16

Compact PA/VA Controller

Connectivity

The DIVA-8MG2 controller provides enhanced digital audio processing (DSP), a digital message player, a fully monitored fireman's microphone, amplifier monitoring with switchover to backups and loudspeaker line monitoring for 16 audio lines (8 lines A/B). A DIVA-8MG2 controller can process and route one PSS-G2/CD-TOUCH console or up to ten PSM/CD-8/CD-16 paging microphones, along with two 0 dB audio inputs and one mic/line input into two different channels (music + voice) using configurable priorities. The DIVA system utilizes two external amplifier channels with a maximum capacity of 1,000w each.

Preprocessing

All audio inputs feature contact and VOX activation, and each input is fitted with volume controls and equalizers. Up to 45 minutes of digital messaging can be stored in the DIVA-8MG2. It has internal digital message memory-up to 45 minutes in wav format. Up to two messages can be played simultaneously in different zones for phased evacuation.

Interfacing

DIVA-8MG2 has nine monitored alarm inputs which can be individually programmed for specific message/input routing to all or selected channels. Each DIVA system has eight output zones with A/B wiring and each zone can be routed manually or automatically to one of the system's audio channels (music or voice). The number of zones can be extended up to 128 A/B zones with the addition of DIVA-8S slave units (max. 15 slave units). The music source can be selected directly from the front panel and switched into each zone separately, also a RS232 port on the rear panel allows third-party control.

FEATURES

- 8 zones with individual volume controls per DIVA-8MG2
- 5 audio inputs (2 x line, 1 x mic/line, 1 x remote console, 1 x fireman mic)
- Handle up to 1,000W wattage capacity per amplifier channel
- Loudspeaker line surveillance (short, open, bad impedance) for speaker zone wiring (A/B)
- 9 monitored logic control inputs, 8 non-monitored logic control inputs
- Ethernet interface for configuration, control, diagnostics and logging
- Digital storage for up to 45 minutes of pre-recorded messages in wav format
- PEQ: 3 bands on inputs, 7 bands on the two outputs channels
- Modbus, notifier, Vox@Net protocol via RS232
- Full monitoring on all DIVA system components and peripherals
- 2 channel audio distribution for paging and BGM
- Incident data record with up to 2,047 entries
- Combined backup amplifier function
- Programmable message files, scheduler and events
- 1 fault relays & 1 evac relays outputs
- Low and high pass filtering on inputs
- Programmable of 21 priority levels
- Programmable of 4 user levels
- 2" full color TFT screen
- Export the incident log
- EN54-16 certified

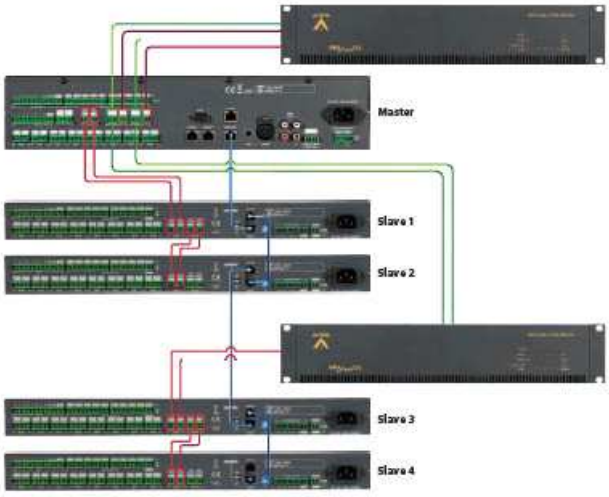

DIVA-8MG2 controller and DIVA-8S slave unit with 4 amplifier channels

ATEIS

DIVA-8MG2

Compact PA/VA Controller

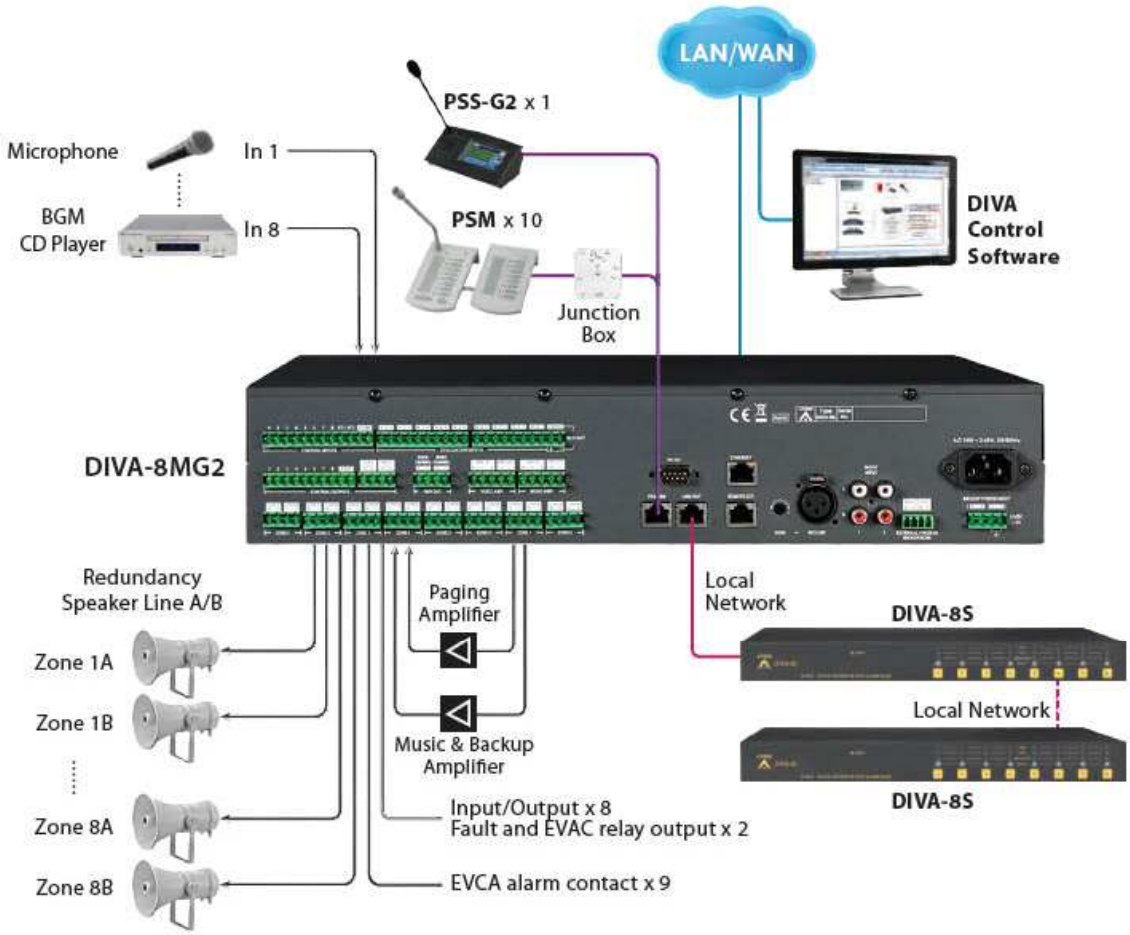

Redundency

In case of evacuation, the amplifier music channel can be used as a second alarm channel. The DIVA-8MG2 controller has 2 amplifier channels (one for music, the other for voice). The music amplifier will also act as a backup amplifier in case of voice amplifier failure. Each channel can handle up to 1,000w audio power (at 100v).

Users shall manually route the fireman microphone and the three audio sources (2 music inputs and 1 mic input). The level of separate zones can be adjusted from the front panel of DIVA-8MG2 controller. In case of evacuation, the zone attenuator are automatically bypassed, and the 8 contact outputs will be activated when the zone is under paging.

Security

In accordance with EN54-16, ISO 7240-16 and BS5839/8, all DIVA system components and peripherals are monitored. This monitoring extends from the capsule of a paging station microphone to the end of a loudspeaker line. The external cables connected to the control inputs are monitored for short and open circuit and an internally-generated pilot tone is available for monitoring impedance on the loudspeaker lines. The controller monitors the status of all the equipment in the system, reports status changes and stores the last 999 fault messages in the system. This log can be accessed on the master unit display or on a PC using the DIVA control software.

The DIVA-8MG2 operates either on 110 VAC or 230 VAC mains power supply or on a 24V battery power supply for emergency backup, with automatic switchover. Both power supplies are monitored.

DIVA-8MG2

Technical Specifications

CONTROLS AND INDICATORS

Front
- 2" full color TFT screen
- Zone selection/music control/EVAC/reset/MSG/test buttons
- Fireman microphone
- VACIE indicators
- Zone attenuator knobs
- Status indicators (power/G. fault/system fault/EVAC/bypass mode)

Back
- Voltage selector

INTERCONNECTIONS

Front
- Fireman microphone

Back
- AC power socket
- 24 VDC backup power input
- 9 EVAC inputs
- 8 control inputs
- 2 state inputs (open contact & close contact)
- 8 control outputs
- Evac & fault contacts
- 1 remote mic input
- Music/line input
- 4 analogue line audio inputs
- Ethernet connection
- 8 zone 100 volt outputs (A+B)
- RS232 connector
- 1 monitored remote port for paging console

CERTIFICATIONS AND APPROVALS

Europe	Voice Alarm	EN54-16 certified 2012
		CE-0359
		according to EN50130-4

PARTS INCLUDED

Quantities	Components
1	DIVA-8MG2 controller
1	Fireman microphone
1	Power cord (type depends on region)
1	Set of connectors
1	Set of 19" rack mount brackets
1	DIVA system software
1	LAN cable

ELECTRICAL

- Mains power supply
  - Voltage: 230/115 VAC ± 15 %, 50/60 Hz
  - Power consumption: 48w
  - Fuse rating: 1.6A
- Battery power supply
  - Voltage: 18 ~ 30 VDC
  - Amp consumption: 1.4A

AUDIO CHARACTERISTICS

- Audio line inputs
  - Connector: 2 x 2 RCA (un-balanced)
  - Frequency response: -3 dB @ 20 Hz and 20 kHz
  - SNR: > 76 dB (line-level), > 78 dB (mic-level)
  - THD: < 0.02% @ 1 kHz
  - Input sensitivity: 770 mV (0 dBu ~ -60 dBU)
  - Input impedance: 10k ohm
- Fireman microphone
  - Connector: 5-pin locking-DIN
  - Frequency response: -3 dB @ 20 Hz and 20 kHz
  - SNR: > 70 dBu
  - THD: < 1% @ 1 kHz @ 8 ohm
  - Signal: -40 to -30 dBu
  - Output impedance: 10k ohm
- Monitor loudspeaker
  - Frequency response: -3 dB @ 200 Hz and 20 kHz
  - SNR: > 70 dB
  - THD: < 5% @ 1 kHz @8 ohm
  - Signal: 16 dBu
- Amplifier capacity (per channel): 1,000W

MECHANICAL

- Dimensions (W x H x D): 483 x 88 x 338 mm (19 x 3.5 x 13.3 inch)
- Weight: 7.5 kg (16.5 lbs)
- Mounting: 19" 2U rack
- Color: RAL7016

ENVIRONMENTAL

- Operating temperature: -5 ºC ~ +55 ºC (+23 ºF ~ +131 ºF)
- Storage temperature: -40 ºC ~ +70 ºC (-40 ºF ~ +158 ºF)
- Relative humidity: 20 % to 95 %
- Air pressure: 600 to 1100 hPa
- Heat dissipation: 140 BTU/hr

CE 12
0359-CDP-0140

DIVA-8S

Compact PA/VA Slave Unit

Connectivity

The DIVA-8S slave unit is an extension unit for the DIVA-8MG2 controller.It increases the number of paging zones by 8 zones for each slave unit added in the system. Up to 15 slave units can be connected to the DIVA-8MG2 controller under local network. A complete DIVA system provides up to 128 zones (A/B). The DIVA-8SG2 units are linked to the system via shielded STP CAT5/6 cable (max. length 100m).

The DIVA-8S handles the same 1,000W capacity as the DIVA-8MG2 controller (at 100V) on each amplifier channel (music + voice). The individual music or voice channel or both channels can be manually/automatically routed zones by the settings of DIVA software. For maximum flexibility, the connected amplifiers can distribute their power across multiple slave units or additional amplifier channels can be added to the system to assist where more output power is needed. The 100V amplifier signal is simply linked to the slaves to create a 100V signal bus.

Interfacing

DIVA-8S extends the number of input and output contacts available in the system. It includes nine alarm inputs triggered either dry contact (configured by software), eight logic contact inputs, two external fault contact inputs and eight contact outputs.

Redundancy

In case of evacuation, the amplifier music channel can be used as a second alarm channel. The DIVA-8MG2 controller has 2 amplifier channel (one for music, the other for voice). The music amplifier will also act as a backup amplifier in case of voice amplifier failure. Each channel can handle up to 1,000W audio power (at 100V).

Users shall manually route the fireman microphone and the three audio sources (2 music inputs and 1 mic input). The level of separate zones can be adjusted from the front panel of DIVA-8MG2 controller. In case of evacuation, the zone attenuators are automatically bypassed, and the 8 contact outputs can be configured when the zone is under paging.

Security

In accordance with EN54-16, ISO 7240-16 and BS5839/8, all DIVA system components and peripherals are monitored. This monitoring extends from the capsule of a paging station microphone to the end of a loudspeaker line. The external cables connected to the control inputs are monitored for short and open circuit and an internally-generated pilot tone is available for monitoring impedance on the loudspeaker lines. The controller monitors the status of all the equipment for the system, reports status changes and stores the last 2,047 incident in the system. This log can be accessed on the master unit display or on a PC using the DIVA control software.

FEATURES

- Low cost 2 voice + music channel switching amplifier architecture (plus back-up amplifier function)
- 9 monitored logic control inputs, 8 non-monitored logic control inputs
- Handle up to 1,000W wattage capacity per amplifier channel
- Loudspeaker line surveillance (short, open, bad impedance) for speaker zone wiring (A/B)
- 1 fault relays & 1 evac relays outputs
- 1U standard 19" rack mounting
- 8 logic relay contacts
- EN54-16 certified

DIVA-8S

Technical Specifications

CONTROLS AND INDICATORS

- **Front**
  - Zone selection buttons
  - Zone status/power indicators
  - VACIE indicators (evac/fault/alert/page/selected)

INTERCONNECTIONS

- **Back**
  - AC power socket
  - 24 VDC backup power input
  - 9 EVAC inputs
  - 8 control inputs
  - 2 state inputs (open contact & close contact)
  - Controller to slave unit link
  - 8 zone 100 volt outputs (A+B)
  - Terminator switch

CERTIFICATIONS AND APPROVALS

Europe	Voice Alarm	EN54-16 certified certified
		CE - 0359
		according to EN50130-4

PARTS INCLUDED

Quantities	Components
1	DIVA-8S slave unit
1	Power cord (type depends on region)
1	Set of connectors
1	Set of 19" mounting brackets

ELECTRICAL

- Mains power supply
  - Voltage: 230/115 VAC ± 15%, 50/60 Hz
  - Power consumption: 35W
  - Fuse rating: 1.6A
- Battery power supply
  - Voltage: 18 ~ 30VDC
  - Amp consumption: 1.4A

AUDIO CHARACTERISTICS

- Frequency response: -3 dB @ 20 Hz and 20 kHz
- Amplifier capacity (per channel): 1,000W (max.)

MECHANICAL

- Dimensions (W x H x D): 483 x 44 x 277 mm (19 x 1.7 x 11 inch)
- Weight: 3.9 kg (8.6 lbs)
- Mounting: 19" 1U rack
- Colour: RAL 7016

ENVIRONMENTAL

- Operating temperature: -5 ºC ~ +55 ºC (+23 ºF ~ +131 ºF)
- Storage temperature: -40 ºC ~ +70 ºC (-40 ºF ~ +158 ºF)
- Relative humidity: 20 % to 95 %
- Air pressure: 600 to 1100 hPa
- Heat dissipation: 120 BTU/hr

CE 12
0359-CDP-0140

Installation Notes

The DIVA-8MG2 controller and DIVA-8S slave unit are designed for entry level solutions. It provides a cost-effective system when there's only paging requirement or paging with BGM. Each DIVA-8MG2 has eight output zones with A/B wiring and each zone can be routed manually or automatically to one of the system's audio source (music or voice). The number of zones can be extended 128 A/B zones with the addition of connected DIVA-8S slave units (max. 15 slave units). DIVA-8MG2 controller and DIVA-8S slave unit have 4 different system solutions.

1. Block-diagram (figure 1)

The DIVA-8MG2 controller and DIVA-8S slave unit require only 2 amplifiers in Single Channel mode, which shows how they are connected to the amplifiers and to the loudspeaker lines using multiple slave units.

Single channel for paging/alert and backup for small loads

Each channel can handle up to 1,000W audio power at 100V and be supplied not only for the master unit but also the slave units in each zone.
Note: The backup amplifier must have the same power capacity as the paging/alert amplifier.

Single channel for paging/alert and backup for higher loads

Process 0 dB audio outputs and handle up to 3,000W audio power at 100V from the DIVA-8MG2 controller and DIVA-8S slave unit, feeding into the additional amplifiers. The system needs 1 backup amplifier to run the multiple DIVA controller and slave units.

Note: The backup amplifier must have the same power capacity as the paging/alert amplifier in the system.

2. Block-diagram (figure 2)

DIVA-8MG2 controller and DIVA-8S slave unit in Dual Channel mode, which shows how they are connected to the amplifiers and to the loudspeaker.

Dual channel for paging/alert and backup for small loads

Each channel can handle up to 1,000W audio power at 100V and be supplied not only for the master unit but also the slave units in each zone.
Note: The BGM/backup amplifier must have the same power capacity as the paging/alert amplifier in case of amplifier failure.

Dual channel for paging/alert and backup for higher loads

Process 0 dB audio outputs and handle up to 3,000W audio power at 100V from the DIVA-8MG2 controller and DIVA-8S slave units, feeding into the additional amplifiers. In this configuration, amplifiers provide paging and music in individual zones simultaneously.

Note: The BGM/backup amplifier must have the same power capacity as the paging/alert amplifier in the system.

Figure 1

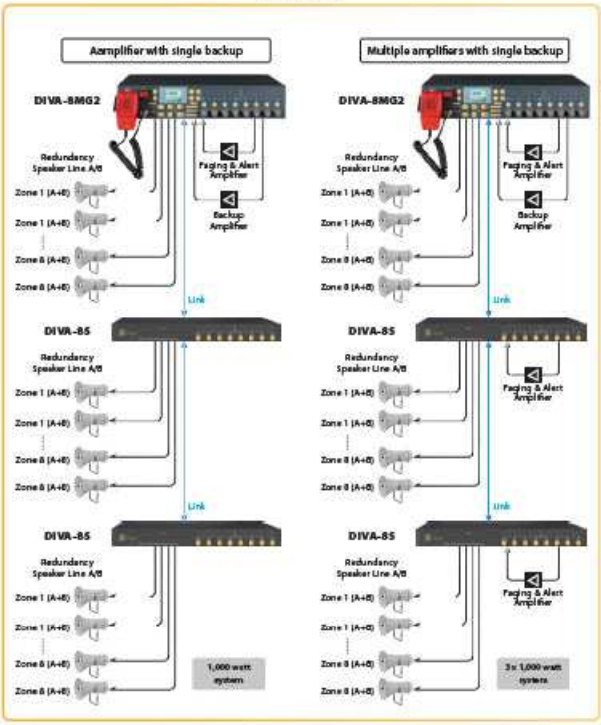

Figure 2

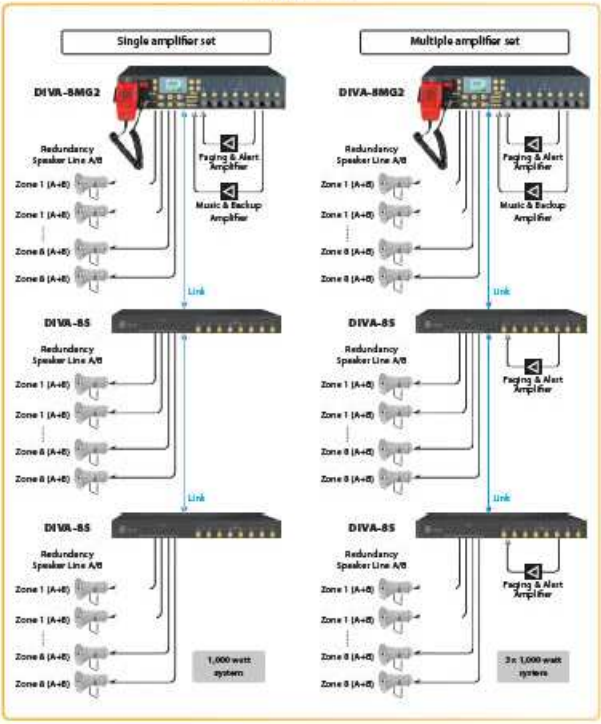

Power Amplifiers

The DPA and DPAfour (Digital Power Amplifier), SPA (Security Power Amplifier) and BPA (Bridging Power Amplifier) are designed for public address or voice alarm system application. They were specifically developed to meet the requirements of EN54-16 and UL2572 and can therefore also be used as part of fire detection and fire alarm systems.

DPA
Digital Power Amplifiers

BPA
Bridging Power Amplifiers

DPA *four*
Digital Power Amplifiers

SPA
Security Power Amplifiers

Battery Chargers

The SONAES and BCU-4830A/BCU-4875A battery chargers are designed for secured battery backup and power sharing to PA/VA system and external power amplifier.

SONAES
Charger and Monitoring Unit

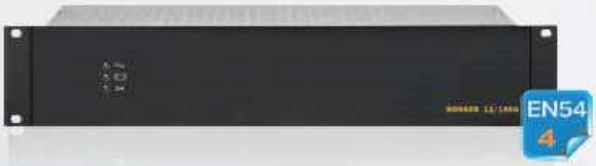

BCU-4830A / BCU-4875A
Advanced Monitored Battery Charger

DPA

Digital Power Amplifier

The DPA is a digital power amplifier with extremely low power consumption (0.2W per channel) during standby mode, and high amplification efficiency of 90%. A four-step DIP switch can be configured to enable/disable the function of standby mode (power-save mode) when powered by AC mains; to request the LEDs on the front panel to comply to EN54-16; and to enable/disable the battery monitoring.

The amplifiers are powered by 100 VAC ~ 240 VAC 50/60 Hz or 48 VDC battery backup. Each model has the line inputs with individual volume gain, status LEDs (power, battery, fault, general fault, overload and signal) on the front panel, and the DPA models can bridge two channels to double the power wattage.

FEATURES

- Class-D amplification performance and energy-efficient design
- Universal switch mode power supply with PFC (Power Factor Correction)
- Full protection circuitry against over/under AC voltage, overload, overheat, short-to-ground or short circuit on speaker lines
- Four models available: DPA8060 (60W x 8 CH), DPA4125 (125W x 4 CH) and DPA4250 (250W x 4 CH) and DPA2500 (500W x 2 CH)
- Support bridging two channels to double the power wattage
- Air flow cooling by internal speed fan (temperature controlled)
- Applicable for full scale of system applications: hotel, railway, airport, houses of worship, educational and sports facilities, club etc.

CONTROLS AND INDICATORS

- **Front**
  - General fault LED (system failed)
  - Overload LED
  - Signal, fault LEDs
  - Power and battery LEDs
- **Rear**
  - AC power socket
  - RS485 for firmware update
  - Lamp input and spare contact input (DPA4125/4250/2500)
  - General fault output and service request output
  - DIP switch for Sleep-AC, EN54-16, BAT-MNT, and one for reserved
  - 2/4/8 (depend on model) channel amp outputs
  - 2/4/8 (depend on model) channel inputs & volume gain
  - 48VDC battery backup input

REAR PANEL

DPA8060

DPA4125

DPA4250

DPA2500

DPA

Technical Specifications

ELECTRICAL

- AC power input: 100 ~ 240 VAC, 50/60 Hz
- Power consumption (AC)

model	idle	1/2 full power	full power
DPA8060	42W	365W	705W
DPA4125	34W	340W	650W
DPA4250	38W	660W	1300W
DPA2500	28W	700W	1320W

Idle: pilot tone -36 dBu, 1/2 full power: alarm tone

- DC power input: 43 ~ 56 VDC
- Power consumption (DC)

model	standby mode	idle	1/8 full power	1/2 full power	full power
DPA8060	2W	35W	92W	330W	635W
DPA4125	0.7W	30W	85W	305W	585W
DPA4250	0.7W	34W	165W	595W	1170W
DPA2500	0.7W	25W	175W	630W	1180W

Idle: pilot tone -36 dB, 1/8 full power: speech, 1/2 full power: alarm tone

- Amplifier outputs
  - EU type: 100V, 50V, 4 ohm
  - US type: 70V, 35V, 4 ohm

AUDIO CHARACTERISTICS

- Frequency response: 50 ~ 20 kHz (±3 dB) @ 0 dBu
- SNR: > 90 dB
- THD+N: < 0.1% @ 1 kHz
- Maximum input level: 0 dBu
- Input impedance
  - DPA2500: 10k ohm
  - DPA8060/DPA4125/DPA4250: 12k ohm
- Crosstalk: > 70 dB @ 0 dBu gain

LOUDSPEAKERS OUTPUTS

model	rated output power	rated load impedance
DPA8060	60W	167 ohm (100V); 82 ohm (70V) 41.6 ohm (50V); 20 ohm (35V)
DPA4125	125W	80 ohm (100V); 40 ohm (70V) 20 ohm (50V); 10 ohm (35V)
DPA4250	250W	40 ohm (100V); 20 ohm (70V) 10 ohm (50V); 5 ohm (35V)
DPA2500	500W	20 ohm (100V); 10 ohm (70V) 5 ohm (50V); 2.5 ohm (35V)

* (1 min. at 40°C) (per CH)

CERTIFICATIONS AND APPROVALS

Europe	Voice Alarm	EN54-16 In process
Europe	CE/EMI	EN55032: 2015 AC: 2016 Class A
Europe	CE/EMC	EN61000-3-2:2014 EN61000-3-3:2013 EN55020:2007/A11:2011
Europe	CE/LVD	EN60065: 2014 (In process)
USA	Mass Notification Systems	UL2572 (Pending)
USA	Safety	UL60065 (Pending)

MECHANICAL

- Dimensions (W x H x D)
  - DPA8060: 437 x 88 x 400 mm (17.2 x 3.5 x 15.7 inch)
  - DPA4125: 437 x 88 x 370 mm (17.2 x 3.5 x 14.6 inch)
  - DPA4250: 437 x 88 x 387 mm (17.2 x 3.5 x 15.2 inch)
  - DPA2500: 437 x 88 x 387 mm (17.2 x 3.5 x 15.2 inch)
- Weight
  - DPA8060: 14.8 kg (32.6 lbs)
  - DPA4125: 14.5 kg (32 lbs)
  - DPA4250: 14.5 kg (32 lbs)
  - DPA2500: 16 kg (35.2 lbs)
- Mounting: 19" 2U rack
- Colour: RAL 7016

ENVIRONMENTAL

- Operating temperature: -5 °C ~ +55 °C (+23 °F ~ +131 °F)
- Storage temperature: -40 °C ~ +70 °C (-40 °F ~ +158 °F)
- Relative humidity: 20 % to 95 %
- Air pressure: 600 to 1100 hPa
- Heat dissipation
  - DPA8060: 767 BTU/hr
  - DPA4125: 512 BTU/hr
  - DPA4250: 1024 BTU/hr
  - DPA2500: 1092 BTU/hr

BPA

Bridging Power Amplifier

The BPA is a 2U 19" rack-mountable bridging power amplifier with extremely low power consumption (0.9W per channel) during standby mode; and transformer isolated for 100V, 50V, 8 ohm or 70V, 35V, 8 ohm speaker line. There are audio line inputs with a balanced XLR and phoenix connectors. The available models are listed as below:

- **BPA-1240/BPA-1480/BPA-1000 (240W/480W/1000W x 1CH)**
- **BPA-2060/BPA-2120/BPA-2240/BPA-2480 (60W/120W/240W/480W x 2CH)**

The BPA-2060, BPA-2120, BPA-2240, BPA-2480 can be bridged (recommend) or paralleled to double the wattage for each two channels. The BPA amplifier is designed to have protection of short-to-ground or short circuit, overload and overheat. It also provides an automatic wake-up signal detection, which can automatically wake up the amplifier from standby mode when receives the audio signal (> -40 dB). The BPA amplifier has a 115 VAC or 230 VAC mains supply and a 48 VDC battery backup input. The status LED on the front panel include power, fault, overload temp. and VU meter.

FEATURES

- 2 channels BPA-2060, BPA-2120, BPA-2240, BPA-2480 can be bridged (recommend) or paralleled to double the power wattage
- Full protection circuitry: overload, short-to-ground or short circuit on speaker lines and overheat
- Extremely low power consumption during standby mode (0.9W)
- Input gain control
- Amplifier outputs
  - US type: 70V, 35V, 8 ohm
  - EU type: 100V, 50V, 8 ohm

CONTROLS AND INDICATORS

- **Front**
  - VU meter LEDs (-40 dB, -20 dB and 0 dB)
  - Overheat LED
  - Overload LED
  - Power LED
  - Power fault LED
- **Back**
  - AC power socket
  - Power on/off switch
  - LED disable switch for EN54-16
  - 48 VDC battery backup input
  - Amp fault contact and on/off switch
  - 1 or 2 (depend on model) channel audio output(s)
  - 1 or 2 (depend on model) XLR line input(s) or euro-block terminal
  - 1 or 2 (depend on model) XLR channel output(s) or euro-block terminal
  - 1 or 2 (depend on model) channel input(s) gain and on/off switch
  - Ground (GND) socket

CERTIFICATIONS AND APPROVALS

Europe	Voice Alarm	EN54-16 (In process)
Europe	CE/EMI	EN55032: 2015 AC: 2016 Class A (In process)
Europe	CE/EMS	EN61000-4-2 (ESD) (In process)
Europe	CE/LVD	EN60065: 2014 (In process)
USA	Mass Notification Systems	UL2572 (Pending)
USA	Safety	UL60065 (Pending)

DIVA & BPA Wiring Example

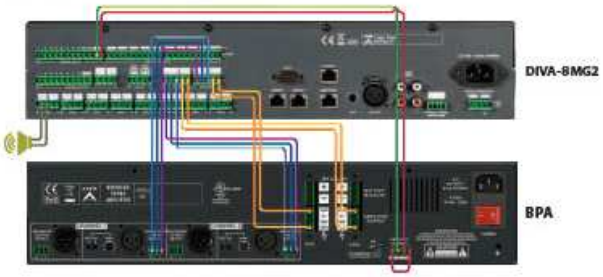

IDA8 & BPA Wiring Example

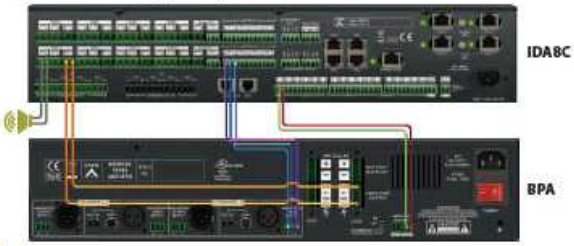

BPA

Technical Specifications

ELECTRICAL

- AC power input
  - EU: 220 VAC ~ 240 VAC, 50/60 Hz
  - US: 100 VAC ~ 120 VAC, 50/60 Hz
- Power consumption (AC)

model	Idle	1/2 full power	full power
BPA-1240	23W	420W	588W
BPA-1480	24W	625W	872W
BPA-2060	40W	212W	282W
BPA-2120	42W	345W	458W
BPA-2240	45W	840W	1175W
BPA-2480	47W	1245W	1745W
BPA-1000	30W	1280W	1795W

IDLE: PILOT TONE -36 DB, 1/2 FULL POWER: ALARM TONE

- DC power input: 43 ~ 56 VDC
- Power consumption (DC)

model	standby mode	idle	1/8 full power	1/2 full power	full power
BPA-1240	0.6W	16W	100W	274W	384W
BPA-1480	0.6W	17W	175W	504W	725W
BPA-2060	0.6W	28W	53W	154W	212W
BPA-2120	0.6W	30W	101W	278W	394W
BPA-2240	0.6W	31W	192W	548W	768W
BPA-2480	0.6W	32W	350W	1008W	1430W
BPA-1000	0.6W	20W	343W	989W	1536W

Idle: pilot tone -36 dB, 1/8 full power: speech, 1/2 full power: alarm tone

- Amplifier outputs
  - E (EU) type: 100V, 50V, 8 ohm
  - U (US) type: 70V, 35V, 8 ohm

AUDIO CHARACTERISTICS

- Frequency response: 50 Hz and 18 kHz (±3 dB)
- SNR: > 86 dB
- THD+N: < =1% @ 1 kHz
- Input impedance: 22k ohm
- Crosstalk (100V): > 80 dB @ 42 dB, 0 dBu (1 kHz) in
- Crosstalk (70V): > 80 dB @ 39 dB, 0 dBu (1 kHz) in

LOUDSPEAKERS OUTPUTS

model	rated output power	rated load impedance
BPA-2060	60W	167 ohm (100V); 82 ohm (70V) 41.6 ohm (50V); 20 ohm (35V)
BPA-2120	120W	83 ohm (100V); 41 ohm (70V) 20 ohm (50V); 10 ohm (35V)
BPA-2240 **BPA-1480**	240W	40 ohm (100V); 20 ohm (70V) 10 ohm (50V); 5.1 ohm (35V)
BPA-1480 **BPA-2480**	480W	20 ohm (100V); 10 ohm (70V) 5 ohm (50V); 2.6 ohm (35V)
BPA-1000	1000W	10 ohm (100V); 4.9 ohm (70V) 2.5 ohm (50V); 1.2 ohm (35V)

* (1 min. at 40°C) (per CH)

MECHANICAL

- Dimensions (H x W x D)
  - BPA-1240: 425 x 88 x 287 mm (16.7 x 3.5 x 11.3 inch)
  - BPA-1480: 425 x 88 x 294 mm (16.7 x 3.5 x 11.6 inch)
  - BPA-2060: 426 x 88 x 356 mm (16.8 x 3.5 x 14 inch)
  - BPA-2120: 426 x 88 x 356 mm (16.8 x 3.5 x 14 inch)
  - BPA-2240: 426 x 88 x 376 mm (16.8 x 3.5 x 14.8 inch)
  - BPA-2480: 426 x 88 x 431 mm (16.8 x 3.5 x 17 inch)
  - BPA-1000: 426 x 88 x 390 mm (16.8 x 3.5 x 15.6 inch)
- Weight
  - BPA-2060: 25.3 lbs (11.5 kg)
  - BPA-2120: 30.2 lbs (13.7 kg)
  - BPA-2240: 35.7 lbs (16.2 kg)
  - BPA-2480: 47.4 lbs (21.5 kg)
  - BPA-1000: 46.2 lbs (21 kg)
- Mounting: 19" 2U rack
- Colour: RAL 7016

ENVIRONMENTAL

- Operating temperature: -5 °C ~ +55 °C (+23 °F ~ +131 °F)
- Storage temperature: -40 °C ~ +70 °C (-40 °F ~ +158 °F)
- Relative humidity: 20 % to 95 %
- Air pressure: 600 to 1100 hPa
- Heat dissipation
  - BPA-1240: 1512 BTU/hr
  - BPA-1480: 3044 BTU/hr
  - BPA-2060: 767 BTU/hr
  - BPA-2120: 1587 BTU/hr
  - BPA-2240: 3019 BTU/hr
  - BPA-2480: 6090 BTU/hr
  - BPA-1000: 6347 BTU/hr

DPA*four*

EN54 16

Digital Power Amplifier

The DPAfour is a 2 RU 19" rack mountable, 4 channel class-D power amplifier, transformer isolated for 100V, 70V, 50V and 4 ohm distributed loudspeaker systems. There are two models in the DPAfour range:

- DPAfour 125 rated at 4 x 125W
- DPAfour 250 rated at 4 x 250W

Each channel can deliver up to 125/250W as a separate channel or can be bridged to deliver higher power. The amplifier has a dual-voltage mains supply 115/230 VAC (selectable internally) and a 24 VDC battery back-up connection.

FEATURES

- Short-to ground or short circuit on speaker line monitoring
- 4 audio outputs (100V/70V/50V/4 ohm selectable)
- Fault reporting outputs
- Four audio input gain control
- Advanced audio processing for each amplifier channel using DIVA or IDA8 systems
- Supervision of the amplifiers through DIVA or IDA8 systems
- Back up amplifier switching through DIVA or IDA8 systems
- Loudspeaker line monitoring with DIVA or IDA8 systems
- Output bridging for higher power

DIVA & DPA*four* Wiring Example with 1CH & 2CH Bridging

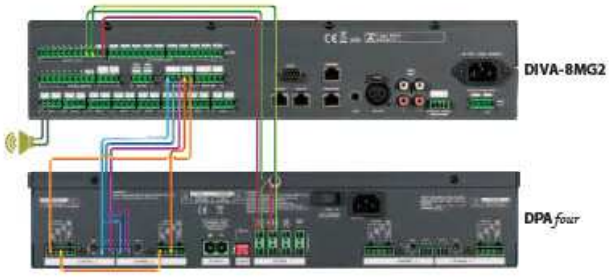

*If DPA *four* channels are bridged, gain settings should be set at equal level for both 1 CH & 2 CH and/or 3 CH & 4 CH.

IDA8 & DPA*four* Wiring Example

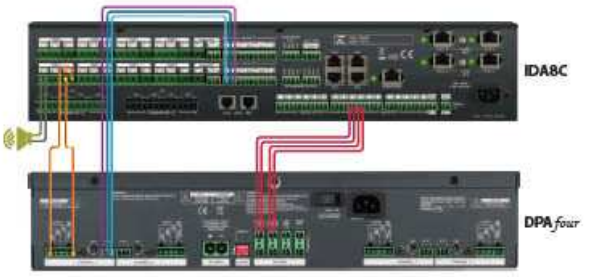

DPA*four*

Technical Specifications

INDICATORS

- **Front**
  - LED VU metering
  - Status indicators for: signal, clip, mains, battery, channel fault and general fault

INTERCONNECTIONS

- **Back**
  - Rotary volume control
  - Mains switch
  - AC power socket
  - 24 VDC backup power input
  - Four line inputs
  - 100V, 70V, 50V or 4 ohm outputs (for each amplifier channel)

CERTIFICATIONS AND APPROVALS

Europe	Voice Alarm	EN54-16 certified certified
		CE - 0359
		according to EN50130-4

PARTS INCLUDED

Quantities	Components
1	DPAxxxx digital power amplifier
1	Power cord
1	Set of connectors

ELECTRICAL

- AC power input: 230/115 VAC ±15%, 50/60 Hz
- Power consumption (AC)

model	idle*	1/2 full power	full power
DPA4125	34W	340W	650W
DPA4250	38W	660W	1300W

* Alarm cycle + 10V pilot-tone @ 24 VDC
** Total mains-power consumption @ 230 VAC

- DC power input: 19 ~ 30 VDC
- Power consumption (DC)

model	standby mode	idle*	1/2 full power	full power
DPA4125	0.7W	30W	305W	585W
DPA4250	0.7W	34W	595W	1170W

* Alarm cycle + 10V pilot-tone @ 24 VDC
** Total mains-power consumption @ 230 VAC

AUDIO CHARACTERISTICS

- Line inputs: 4 x (one per channel)
  - Connector: 3-pin phoenix
  - Frequency response: ±3 dB @ 50 Hz and 20 kHz
  - SNR: > 90 dB
  - THD: < 0.1 % @ 1 kHz
  - Input sensitivity: 770 mV
  - Input impedance: 22k ohm
- Frequency response: 40 Hz to 20 kHz (-3 dB)
- SNR: >90 dB (no pilot tone)
- Crosstalk: <70 dB at nominal load for 1 kHz
- Distortion: < 0.1 % (@ 1 kHz) @ -10 dB of rated output power

LOUDSPEAKERS OUTPUTS

model	rated output power	rated load impedance
DPA4125	150W	80 ohm (100V); 40 ohm (70V) 20 ohm (50V); 10 ohm (35V)
DPA4250	250W	40 ohm (100V); 20 ohm (70V) 10 ohm (50V); 5 ohm (35V)

* (1 min. at 40°C) (per CH)

MECHANICAL

- Dimensions (W x H x D): 483 x 88 x 370 mm (19 x 3.5 x 14.6 inch)
- Weight
  - DPA4125: 14 kg (31 lbs)
  - DPA4250: 18 kg (40 lbs)
- Mounting: 19" 2U rack
- Colour: RAL 7016

ENVIRONMENTAL

- Operating temperature: -5 °C ~ +55 °C (+23 °F ~ +131 °F)
- Storage temperature: -40 °C ~ +70 °C (-40 °F ~ +158 °F)
- Relative humidity: 20 % to 95 %
- Air pressure: 600 to 1100 hPa
- Heat dissipation
  - DPA4125: 750 BTU/hr
  - DPA4250: 1,500 BTU/hr

CE 12
0359-CDP-0177
0359-CDP-0140

SPA

Security Power Amplifier

There are four types of power amplifier units in the SPA amplifier product rrange: SPA1480 (1CH x 480W), SPA2060 (2CH x 60W), SPA2120 (2CH x 120W) and SPA2240 (2CH x 240W). The power amplifiers can be set to 100V, 70V and 8 ohm output tapings. They have short-to-ground, short-circuit detection and line-impedance surveillance up to 5% deviation using the DIVA and IDA8 products for loudspeaker-line surveillance.

They support both single-spure and redundant loop cabling (A/B). The amplifiers have a changeover facility for spare power amplifier switching. Both features are facilitated by the DIVA and IDA8 controllers and slave units. The amplifiers have a 24 VDC backup supply input.

The power amplifiers receive line-level input signals from the DIVA and IDA8 controllers and slave units. The front panel will show the VU-meter when the EN54-16 default switch is inhibited.

FEATURES

- 2 audio outputs (selectable 100V/70V/8 ohm outputs)
- Fault reporting outputs
- Two audio inputs with gain-set
- Supervision of the amplifiers using DIVA or IDA8 controllers
- Advanced audio processing for each amplifier channel using DIVA or IDA8 systems
- Amplifier supervision and spare amplifier switching through DIVA or IDA8 systems
- Loudspeaker line and loudspeaker supervision through DIVA or IDA8 systems

DIVA & SPA Wiring Example

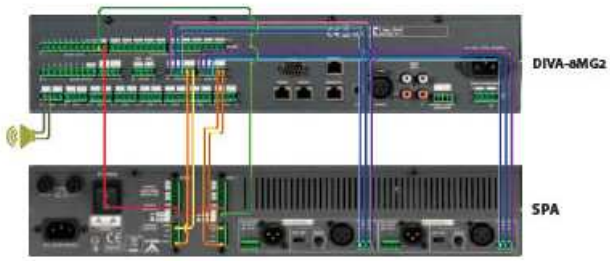

IDA8 & SPA Wiring Example

SPA

Technical Specifications

INDICATORS

- **Front**
  - LED VU metering
  - Status indicators for: overload, over temperature, battery and mains

INTERCONNECTIONS

- **Back**
  - Rotary volume control
  - Mains switch
  - AC power socket
  - 24 VDC backup power input
  - Four line inputs
  - 100V, 70V or 8 ohm outputs (for each amplifier channel)

CERTIFICATIONS AND APPROVALS

Europe	Voice Alarm	EN54-16 certified certified
		CE - 0359
		according to EN50130-4

PARTS INCLUDED

Quantities	Components
1	SPA 2xxx security power amplifier
1	Power cord
1	Set of mounting brackets for 19" rack
1	Set of connectors
1	Set of feet

ELECTRICAL

- AC power input: 220 VAC ±10 %, 50 Hz
- Power consumption (AC)

model	idle	1/2 full power	full power
DPA4125	290W	340W	650W
DPA4250	550W	660W	1300W

* Idle: Measured with 10 Volt surveillance tone on the output
** Total mains-power consumption

- DC power input: 19 ~ 30 VDC
- Power consumption (DC)

model	standby mode	idle	1/2 full power	full power
DPA4125	0.7W	30W	305W	585W
DPA4250	0.7W	34W	595W	1170W

* (Alarm cycle + 10V pilot-tone @ 48 VDC)
** (Per ch. @ 24 VDC)

AUDIO CHARACTERISTICS

- Line inputs: 2 x (one per channel)
  - Connector: 3-pin XLR and 3-pin phoenix (electronically balanced)
  - Frequency response: ±3 dB @ 40 Hz and 20 kHz
  - SNR: > 86 dB @ 1 kHz at full power
  - THD: ≤ 1% @ 1 kHz
  - Input range: -6 dBV to 6 dBV/770 mV
  - Input impedance: 22k ohm
- Frequency response: 20 Hz to 20 kHz @ -3 dB
- SNR: > 90 dB (no pilot tone)
- Crosstalk: < 80 dB at nominal load for 1 kHz
- Distortion: < 0.1% (@ 1 kHz) @ -10 dB of rated output power

LOUDSPEAKERS OUTPUTS

model	rated output power	rated load impedance
SPA2120	120W	83 ohm (100V); 41 ohm (70V) 21 ohm (50V); 10 ohm (35V)
SPA2240	240W	40 ohm (100V); 20 ohm (70V) 10 ohm (50V); 5 ohm (35V)

* (1 cont. at 40°C) (per CH)

MECHANICAL

- Dimensions (W x H x D) (for 19" rack use with brackets)
  - SPA2120: 425 x 88 x 305 mm (16.7 x 3.5 x 12 inch)
  - SPA2240: 425 x 88 x 402 mm (16.7 x 3.5 x 15.8 inch)
- Weight
  - SPA2120: 12.3 kg (27.1 lbs)
  - SPA2240: 18.5 kg (40.8 lbs)
- Mounting: 19" 2U rack
- Colour: RAL 7016

ENVIRONMENTAL

- Operating temperature: -5 °C ~ +55 °C (+23 °F ~ +131 °F)
- Storage temperature: -40 °C ~ +70 °C (-40 °F ~ +158 °F)
- Relative humidity: 20% to 95%
- Air pressure: 600 to 1100 hPa
- Heat dissipation
  - SPA2120: 1160 BTU/hr
  - SPA2240: 2110 BTU/hr

CE 12
0359-CDP-0177
0359-CDP-0140

SONAES

Charger and Monitored Unit

The SONAES series of battery chargers (24 VDC) are designed for voice alarm system. The battery chargers are microprocessor based devices that have been designed to charge lead acid batteries (back-up batteries connected to the voice alarm system, and simultaneously provide power to auxiliary devices such as the DIVA and IDA8 controllers. The SONAES includes two EN54-4 certified models:

- **SON 24V 6A MS40 RACK**
- **SON 24V 12A MS150 RACK**

The maximum charging current is 6 or 12A. The battery charger is two rack units high, and has to be installed in a 19" rack. Maximum battery capacity 114 or 225 AH. The SONAES comes without batteries.

OVERVIEW

To meet the secured power backup system need, determining the exact conditions and the amount of battery backup for a system is much complex than other applications. Public address/voice alarm system does not draw a constant current. The standard defines a standby time and an evacuation time. In this case, it is crucial to pick a battery backup that shall supply the minimum amount of power for a set amount of time. With SONAES battery chargers, it provides you with a battery calculator program which determines the exact capacity.

REGULAR PROCEDURE AS FOLLOWS

1. Determine the standby/evacuation current and the amount of battery backup of the system
2. Detect and enhance the standby/evacuation current simultaneously for 24 hours
3. 24 hours discharge capacity of the battery

FEATURES

- **SON 24V 6A MS40 RACK**
  - 2 RU-rackmount charger
  - 3 auxiliary outputs, max. 5A per output
  - 2 main outputs, max. 20A per output
  - Battery capacity: 24 AH to 114 AH
- **SON 24V 12A MS150 RACK**
  - 2 RU-rackmount charger
  - 3 auxiliary outputs, max. 5A per output
  - 6 main outputs, max. 40A per output
  - Battery capacity: 65 AH to 225 AH

Block Diagram for SON 24V 6A MS40 RACK

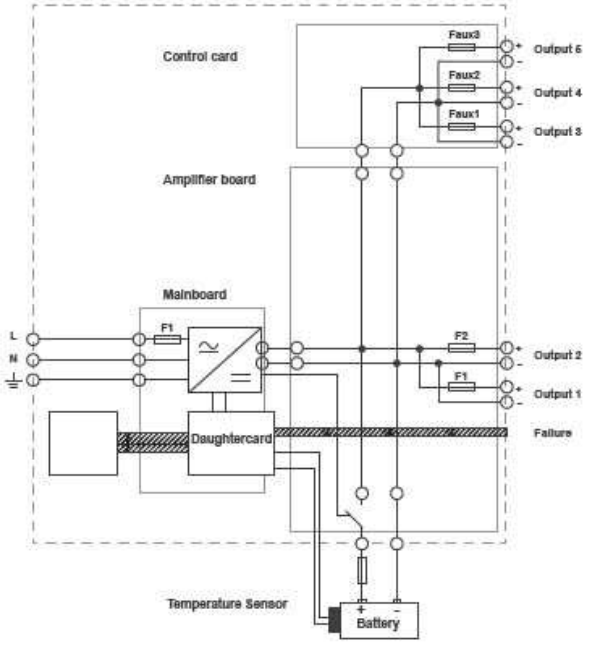

SONAES

Technical Specifications

CERTIFICATIONS AND APPROVALS

Europe	Voice Alarm	EN54-4 certified certified
		0333-CDP-075381
		0333-CPD-075382

PARTS INCLUDED

Quantities	Components
1	SON 24V 6A MS40 RACK SON 24V 12A MS150 RACK
1	Set of connectors

ELECTRICAL

- Mains power supply
  - Voltage: 230 VAC ±15 %, 50/60 Hz
  - Power consumption
    - SON 24V 6A MS40 RACK: 190W at full load
    - SON 24V 12A MS150 RACK: 380W at full load
- Battery power supply
  - Voltage: 24VDC
  - Maximum charging current
    - SON 24V 6A MS40 RACK: 6A
    - SON 24V 12A MS150 RACK: 12A
- Outputs
  - Main for amplifiers
    - SON 24V 6A MS40 RACK: max. 40A for 5 outputs
    - SON 24V 12A MS150 RACK: max. 150A for 9 outputs
  - Auxiliary for controllers: 3
  - Maximum current: 5A
- Batteries: 2 x 12V, 24 to 225 AH
  - Approved brands
    - Yuasa NPL Series
    - Power-Sonic GB Series
    - ABT TM Series
    - EnerSys VE Series
    - Effekta BTL Series
    - Long GB Series

MECHANICAL

- Dimensions (W x H x D): 483 x 89 x 399 mm (19 x 3.5 x 16 inch)
- Weight
  - SON 24V 6A MS40 RACK: 3.1 kg (6.8 lbs)
  - SON 24V 12A MS150 RACK: 5.4 kg (12 lbs)
- Mounting: 19" 2U rack
- Colour: RAL 7016

ENVIRONMENTAL

- Operating temperature: -5 ºC ~ +45 ºC (+23 ºF ~ +113 ºF)
- Storage temperature: -20 ºC ~ +85 ºC (-4 ºF ~ +185 ºF)
- Relative humidity: 20 % to 95 % (non-condensing)
- Air pressure: 600 to 1100 hPa
- Heat dissipation: 1,300 BTU/hr

SON 24V 6A MS40 RACK

CE 12
0333-CPD-075382

SON 24V 12A MS150 RACK

CE 12
0333-CPD-075381

BCU-4830A/BCU-4875A

Advanced Monitored Battery Charger

The BCU-4830A/BCU-4875A battery chargers (48VDC) are designed for secured battery backup and power sharing to PA/VA system. The microprocessor-based design makes the charging process be programmed and optimized by sensing the battery status and temperature. With Battery Balance function, the capacity utilization of the battery cells can be maximized and increases the longevity as well.

The two (BCU-4830A)/six (BCU-4875A) 48V outputs provide the controllers or power amplifiers with a maximum current 30A (BCU-4830A)/75A (BCU-4875A) per unit, 20A per output. And three 24V outputs provide auxiliary or remote units with a maximum current 8A per unit, 3A per output. The maximum charging current of BCU-4830A is 3A and 6A for BCU-4875A. In addition, four fault contact outputs (GENERAL/MAINS/BATTERY/OUTPUT) are equipped for remote status monitoring, including the AC mains power fault and battery status: bad/voltage too high or too low/not present.

CONTROLS AND INDICATORS

- **Front**
  - Mains LED, battery status LED, output status LED
  - Battery balance LEDs: fault, ready, processing
- **Back**
  - AC power cord socket
  - Battery terminal
  - Monitor DIP switch
  - Temperature sensor
  - Battery balance terminal
  - Contacts outputs
    (general fault, mains status, battery status, output voltage status)
  - 2 mains output terminals (BCU-4830A)
  - 6 mains output terminals (BCU-4875A)
  - 3 auxiliary output terminals (24V)

AC POWER INPUT

- Voltage: 100 ~ 240 VAC, 50/60 Hz

POWER CONSUMPTION (AC)

model	standby mode	full power
BCU-4830A	5W	220W
BCU-4875A	8W	410W

POWER CONSUMPTION (DISCHARGING)

model	standby mode	full power
BCU-4830A	4W	1440W
BCU-4875A	6.5W	3600W

CHARGING

- Voltage: 48 VDC
- Maximum charging current
  - BCU-4830A: 3A
  - BCU-4875A: 6A

BATTERIES

- Battery capacity (4 x 12V)
  - BCU-4830A: 10 Ah to 65 Ah
  - BCU-4875A: 26 Ah to 120 Ah
- Recommended brands: Yuasa NPL Series, Power-Sonic GB Series, ABT TM Series, EnerSys VE Series, Eekta BTL Series, Long GB Series

MAX. OUTPUT CURRENT

model	48V (per unit)	48V (per output)	24V (per unit)	24V (per output)
BCU-4830A	30A	20A	8A	3A
BCU-4875A	75A	20A	8A	3A

CERTIFICATIONS AND APPROVALS

Europe	Voice Alarm	EN54-16 (In process)
Europe	CE/EMI	EN55032: 2015 AC: 2016 Class A (In process)
Europe	CE/EMC	EN61000-3-2:2014 EN61000-3-3:2013 EN55020:2007/A11:2011 (In process)
Europe	CE/LVD	EN60065: 2014 (In process)
USA	Mass Notification Systems	UL2572 (Pending)
USA	Safety	UL60065 (Pending)

MECHANICAL

- Dimensions (W x H x D)
  - BCU-4830A: 437 x 88 x 270 mm (17.2 x 3.5 x 10.6 inch)
  - BCU-4875A: 437 x 88 x 270 mm (17.2 x 3.5 x 10.6 inch)
- Weight
  - BCU-4830A: 5.5 kg (12.1 lbs)
  - BCU-4875A: 6 kg (13 lbs)
- Mounting: 19" 2U rack
- Colour: RAL 7016

ENVIRONMENTAL

- Operating temperature: -5 ºC ~ +55 ºC (+23 ºF ~ +131 ºF)
- Storage temperature: -40 ºC ~ +70 ºC (-40 ºF ~ +158 ºF)
- Relative humidity: 20 % to 95 %
- Air pressure: 600 to 1100 hPa
- Heat dissipation
  - BCU-4830A: 102 BTU/hr
  - BCU-4875A: 205 BTU/hr

Ordering Information

DIVA Compact PA/VA System	
DIVA-8MG2	Digital Integrated Voice Alarm (System) (M)-8 zone
DIVA-8S	Digital Integrated Voice Alarm (System) (S)-8 zone
Digital Power Amplifiers	
DPA8060E	60Wx8 DPAmp/100-240Vac,OUT 100V/50V/4ohm
DPA8060U	60Wx8 DPAmp/100-240Vac,OUT 70V/35V/4ohm
DPA4125E	125Wx4 DPAmp/100-240Vac,OUT 100V/50V/4ohm
DPA4125U	125Wx4 DPAmp/100-240Vac,OUT 70V/35V/4ohm
DPA4250E	250Wx4 DPAmp/100-240Vac,OUT 100V/50V/4ohm
DPA4250U	250Wx4 DPAmp/100-240Vac,OUT 70V/35V/4ohm
DPA2500E	500Wx2 DPAmp/100-240Vac,OUT 100V/50V/4ohm
DPA2500U	500Wx2 Digital Power Amplifier,OUT 70V/35V/4ohm
DPA*four*-125	125W x 4 Digital Power Amplifier
DPA*four*-250	250W x 4 Digital Power Amplifier
Security Power Amplifiers	
SPA 2060	Audio Power Amp. 2 channel 60w
SPA 2120	Audio Power Amp. 2 channel 120w
SPA 2240	Audio Power Amp. 2 channel 240w
SPA 1480	Audio Power Amp. 1 channel 480w
Bridging Power Amplifiers	
BPA-1240E	240Wx1 BPAmp/220-240Vac,OUT 100V/50V/8ohm
BPA-1480E	480Wx1 BPAmp/220-240Vac,OUT 100V/50V/8ohm
BPA-2060E	60Wx2 BPAmp/220-240Vac,OUT 100V/50V/8ohm
BPA-2120E	120Wx2 BPAmp/220-240Vac,OUT 100V/50V/8ohm
BPA-2240E	240Wx2 BPAmp/220-240Vac,OUT 100V/50V/8ohm
BPA-2480E	480Wx2 BPAmp/220-240Vac,OUT 100V/50V/8ohm
BPA-1000E	1000Wx1 BPAmp/220-240Vac,OUT 100V/50V/8ohm

Available types
E: 220 ~ 240 VAC, output 100V/50V/8ohm
U: 100 ~ 120 VAC, output 70V/35V/8ohm
T: 100 ~ 120 VAC, output 100V/50V/8ohm

Battery Chargers	
SON 24V 6A MS40 RACK	Charger and Monitored Unit 6amp/40amp
SON 24V 12A MS150 RACK	Charger and Monitored Unit 12amp/150amp
BCU-4830A	Advanced Monitored Battery Charger 3amp/30amp
BCU-4875A	Advanced Monitored Battery Charger 6amp/75amp

Paging Consoles & Accessories

PSS-AS/PSS-G2/PSS-G2E
Color Touch Screen Paging Console

PPM-IT5
Color Touch Screen IP Paging Console

PPM-AS/PSM
Desktop Paging Consoles

Paging Consoles & Accessories

CD-8/CD-16/CD-8AS/CD-16AS

Wall-Mount Monitored Paging Console

EN54 16

EN54 16

CD-TOUCH/CD-TOUCHAS

Wall-Mount Monitored Touch Screen Paging Console

URC-150AS/URC-200AS

Programmable Remote Controller

URGP-32I2O/URGP-16I16O

Alarm Input Interface
for IDA8 and DIVA System

EN54 16

PSS-AS / PSS-G2 / PSS-G2E / PPM-IT5

Full Color Touch Screen Paging Console

PSS-AS / PSS-G2 / PSS-G2E

PPM-IT5

The PSS paging console comes with a 5" TFT touch screen interface which allows call-paging, message broadcasting and DSP matrix parameter control over a secure (monitored) bus. The backlit full-color touch screen is designed for simple, user-friendly operation and offers a total of 168 software keys across 14 pages for zone or group of zones selections. Each key contains a color-changing field indicating that the zone is occupied by a different process. Alongside the touch screen, three hardware keys are also provided for free assignment within the software.

Several levels of operation with password protection make the PSS a versatile device that fits as well in a commercial shopping center as in an industrial high-security environment. All paging parameters for site operation can be pre-programmed; zones can be assigned, named, grouped to different buttons, message triggered and level, pre-call chime set and adjusted. The message and the chime can also be stored in the PSS console. In addition, fader control, button control and event control can also be pre-configured.

The PSS-AS and the PSS-G2 are powered by 24VDC supply.
There are two versions of the PSS paging console with identical hardware and functions, but the firmware is different with different systems.

- **PSS-AS**: Used with IDA8 and ECS system, RS485 type
- **PSS-G2**: Used with DIVA system, RS485 type
- **PSS-G2E**: Used with DIVA system, Ethernet type

The ATEÏS range of security systems complies with current architectural demands requiring IP and/or fiber-optic networking to cater for any possible complex PA/VA design. ATEÏS responds to Public Address and Voice Alarm requirements as stated in EN54-16, ISO 7240-16 and BS5839/8, with specific attributes for compliance in large installations.

PSS FEATURES

- Secured STP CAT5/6 link to controllers and slaves
- Supervision of microphone capsule
- Monitoring loudspeaker
- 5"full color touch-screen, 800 x 480 pixels
- 14 pages x 12 keys
- Power, status and fault indicator
- Comprehensive system status information from touch-screen
- EN54-16 certified

- **PPM-IT5**: Used with IDA8 system, Ethernet type

The 3 hardware keys can be freely assigned by software. The PPM-IT5 console is a versatile device that enhances paging over IP network.

All paging parameters needed for site operating can be programmed: zones assigned to different buttons, name of zones, group of zones, messages triggering or event control. A total of 3600 keys over 300 pages allow zones or groups of selection. All the settings shall be done via web browser.

PPM-IT5 FEATURES

- 5" TFT full color paging console
- High quality gooseneck microphone and built-in loudspeaker
- Ethernet interface including PoE (Power Over Ethernet)
- Automatic gain control on microphone input
- Echo cancellation and noise reduction
- Up to 300 pages x 12 keys
- G.711/G.722/G.726/G.727 audio encoding/decoding
- Audio streaming using SHOUTcast / ICEcast (AAC 48K/44.1K) protocols
- Half or full duplex conversation
- Memory space for prerecorded messages and chime
- 3 user-defined key-buttons via ATEÏS Studio software
- RJ9 for telephone headset and 2 mini-jack plugs for headset (optional)

PSS-AS / PSS-G2 / PSS-G2E / PPM-IT5

Technical Specifications

CONTROLS AND INDICATORS
- 5" full color touch-screen, 800 x 480 pixels
- Three LED status indicators
- Three hardware function keys-buttons
- 280mm gooseneck microphone

INTERCONNECTIONS
- **Rear**
  - RJ45 for STP CAT5/6 connection
  - 3.5 mm mini-jack for headset
  - External power supply connector

CERTIFICATIONS AND APPROVALS

Europe	Voice Alarm	EN54-16 certified 2012
		CE-0359
		according to EN50130-4

PARTS INCLUDED

Quantities	Components
PSS-AS/PSS-G2/PSS-G2E	
1	PSS-XX
1	CAT5 cable, 1.5m
PPM-IT5	
1	PPM-IT5XX
1	CAT5 cable, 1.5m
1	AC-DC power adapter

ELECTRICAL
- Mains power supply
  - Voltage: 18 ~ 30VDC (PoE: 24VDC)
  - Power consumption: 250 mA

AUDIO CHARACTERISTICS
- Frequency response
  - PSS-AS/G2/G2E: -3 dB @ 200 Hz to 8 kHz
  - PPM-IT5: -3 dB @ 100 Hz to 81 kHz
- THD: < 1% @ 1 kHz
- Max output level: 6 dBu
- Noise gate threshold: -84 dBu ~ -24 dBu
- Attack time: 8 ms
- Release time: 100 ms
- Output impedance: 100 ohm
- Monitoring speaker
  - Impedance: 4 ohm
  - Output power: 1W @ 1 kHz
  - Frequency response: -3 dB @ 200 to 12 kHz
- Headset connector
  - PSS-AS/G2/G2E: 3.5 mm mini-jack
  - PPM-IT5: 2 x 3.5 mini-jack
- System connection
  - Cable type: STP CAT5/6
  - Length: 100m

MECHANICAL
- Dimensions (W x H x D): 250 x 80 x 140 mm (9.8 x 3.1 x 5.5 inch)
- Weight: 1.1 kg (2.4 lbs)
- Color: RAL7016

ENVIRONMENTAL
- Operating temperature: -5 ºC ~ +55 ºC (+23 ºF ~ +131 ºF)
- Storage temperature: -40 ºC ~ +70 ºC (-40 ºF ~ +158 ºF)
- Relative humidity: 20 % to 95 %
- Air pressure: 600 to 1100 hPa
- Heat Dissipation: 20 BTU/hr

CE 12
0359-CDP-0177
0359-CDP-0140

PPM-AS / PSM

Desktop Paging Consoles

PPM-AS/PSM is a unidirectional addressable condenser paging microphone for IDA8 and DIVA system. In accordance with BS5839, it is monitored by using RS485 protocol over STP CAT5/6 cable, and transmits both audio and power from the paging console to the system units. The PPM-AS/PSM has 8 zone buttons with a sleek gooseneck microphone, providing durability and aesthetics in a slim, stable chassis.

The PPM-AS/PSM enables live announcement to any pre-assigned zones (an optional PPM-SP hardware version also allows for broadcasting the pre-recorded messages). The paging station has a gooseneck microphone, a push-to-talk button, zone selection keys and a monitor speaker. Buttons represent a single zone or a group of zones and be easily defined in the software using a simple matrix selection. All buttons can be programmed with drag & drop features from the software and each button can be programmed for PTT (Push To Talk) or latching functionality.

In addition to the zone LEDs, "Hold" and "Busy" LED signals make PPM-AS/PSM an extremely user-friendly paging console. Thanks to the cardioids polar pick-up pattern, the unidirectional condenser microphone ensures the high-quality and directive signal pick-up with minimal interference from the surroundings.

The RS485 communication protocol allows daisy-chain wiring up to 300m on a single CAT5/6 cable (FTP/STP) and makes each station easy to connect by using standard RJ45 connectors. The junction box supplied with PPM-AS/PSM allows multiple peripherals such as PPM-AS, PSM, CD8, CD16, and URC can be cascaded with the distance of up to 300m between a peripheral and a junction box, and up to 10 peripherals can be connected via junction boxes on one processor. In addition, the junction box can be powered from the processor or 24VDC local power supply.

There are three versions of the PPM paging console with identical hardware and functions, the firmware is different with different systems.

- **PPM-AS**: Used with IDA8 system
- **PSM**: Used with DIVA system
- **PPM-SP**: Used with LAPG2T and UAPG2 system

FEATURES

- Monitored STP CAT5/6 link to controllers and slaves
- Supervision of microphone capsule (not on slave units)
- Automatic gain control on microphone input
- 8 zone selection keys (expandable with additional keypads)
- All-call key
- Power LED, evac LED, status and fault LED
- Monitor speaker

PPM-AS or PSM with PPM-KP keypad

PPM-AS / PSM

Technical Specifications

CONTROLS AND INDICATORS
- Fault, evac, power, hold indicator
- Zone selection buttons
- All call/release button and indicator
- Talk button and indicator
- Busy indicators

INTERCONNECTIONS
1 remote port to link to controller (RJ45 connector, STP CAT5/6 cable)

PARTS INCLUDED

Quantities	Components
1	PPM-AS/PSM-XX
1	Junction box
1	CAT5 cable, 10 pin, 1.5m

ELECTRICAL
- Mains power supply
  - Voltage: 18 ~ 26VDC
  - Power consumption: 120 mA

AUDIO CHARACTERISTICS
- Frequency response: -3 dB @ 200 Hz to 8 kHz
- THD: < 1% @ 1 kHz
- Max output level: 6 dBu
- Noise gate threshold: -84 dBu ~ -24 dBu
- Attack time: 8 ms
- Release time: 100 ms
- Output impedance: 100 ohm
- Monitoring speaker
  - Impedance: 4 ohm
  - Output power: 1W @ 1 kHz
  - Frequency response: -3 dB @ 200 to 12 kHz
- System connection
  - Cable type: CAT5/6, 10 pin (FTP)
  - Length: 100m

MECHANICAL
- Dimensions (W x H x D)
  - PPM-AS base: 105 x 50 x 190 mm (4.1 x 2 x 7.5 inch)
  - PPM-AS with microphone: 105 x 350 x 190 mm (4.1 x 13.8 x 7.5 inch)
- Weight: 0.7 kg (1.54 lbs)
- Color: RAL7035

ENVIRONMENTAL
- Operating temperature: -5 ºC ~ +55 ºC (+23 ºF ~ +131 ºF)
- Storage temperature: -40 ºC ~ +70 ºC (-40 ºF ~ +158 ºF)
- Relative humidity: 20 % to 95 %
- Air pressure: 600 to 1100 hPa
- IP rating: 30
- Heat dissipation: 10 BTU/hr

PSC

Desktop Paging Consoles

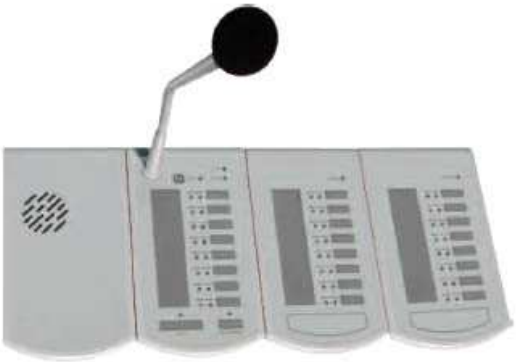

The PSC microphone console is an unidirectional condenser addressable microphone, which is compatible with all ATEÏS systems. By using RS485 protocol with daisy-chain wiring, the PSC can support up to 100M over a single CAT5/6 cable connection. It transmits both audio data and power supply to system units. PSC comprises of 8 zone buttons with sleek condenser gooseneck microphone, and spring metal protection, providing durability and excellent aesthetics as well as enhancing up to 256 zones expansion via the additional keypad. The control buttons represent a single zone or a group of zones and are easily defined via the GUI software of the system units using a simple matrix selection.

Besides the built-in speaker, PSC also supports an external speaker to monitor the audio source. The unit offers "Hold" and "Busy" LED signals in addition to the zone LED's, and these features allow an easy identification of selection/busy signals for users.

Each button can be programmed for Push To Talk function or Latch mode. The PSC console warrants high quality of directive pickup signal and less interference from the surroundings.

CONTROLS AND INDICATORS

- Goose-neck microphone
- Fault/evac/power/talk/hold/all call/release/busy indicator
- All call/release/talk button
- Microphone connector
- Event select key

INTERCONNECTIONS

- **Back**
  - RS485 for CAT5/6 connection

PARTS INCLUDED

Quantities	Components
1	PSC-XX
1	Junction Box
1	CAT5 cable, 10 pin, 1.5m

ELECTRICAL

- Mains power supply
  - Voltage: 18 ~ 30VDC (PoE: 44 ~ 57VDC)
  - Power consumption: 150 mA

AUDIO CHARACTERISTICS

- Frequency response: -3 dB @ 200 Hz to 20 kHz
- THD: < 1% @ 1 kHz
- Max output level: 6 dBu
- Noise gate threshold: -84 dBu ~ –24 dBu
- Release time: 100 ms
- Output impedance: 100 ohm
- System connection
  - Cable type/length: CAT5,10 pin (FTP)/100m (max.)
- Monitoring speaker
  - Impedance: 8 ohm
  - Output power: 1W @ 1 kHz
  - Frequency response: -3 dB @ 200 to 20 kHz

MECHANICAL

- Dimensions (W x H x D): 220 x 116 x 483 mm (8.7 x 4.6 x 19 inch)
- Weight: 0.37 kg (0.8 lbs)
- Colour: RAL7035

ENVIRONMENTAL

- Operating temperature: -5 ºC ~ +55 ºC (+23 ºF ~ +131 ºF)
- Storage temperature: -40 ºC ~ +70 ºC (-40 ºF ~ +158 ºF)
- Relative humidity: 20 % to 95 % (non-condensing)
- Air pressure: 600 to 1100 hPa
- IP rating: 30
- Heat dissipation: 12 BTU/hr

CD-TOUCHAS / CD-TOUCH

Wall-Mount Monitored Touch Screen Paging Console

The CD-TOUCHAS/CD-TOUCH paging console is a paging interface that allows call-paging, message broadcasting and DSP matrix parameter control. It is equipped with a 5" full-color backlit touch-screen for simple, user-friendly operation. The screen offers up to 168 buttons across 14 pages which can be freely assigned in the software to any zone or group of zones. Each key contains a color-changing field indicating if the zone is occupied by a different process. In addition, the CD-TOUCHAS/CD-TOUCH has 3 hardware keys that can be assigned within the system control software.

All paging parameters for site operation can be pre-programmed and stored within the console, including message triggering, level adjustment and pre-call chime setup. Distributed zones and the name of zone(s) can also be pre-configured.

The CD-TOUCHAS/CD-TOUCH units connect to a monitored bus on CAT-5 FTP/STP. This connection also provides Power Over Ethernet (POE). In case the POE is not available, or if the cable connection is greater than 100m, an additional power connection can be supplied provided with 24VDC power.

The ATEÏS range of security systems complies with current architectural demands requiring IP and/or fiber-optic networking to allow for even the most complex of system designs. ATEÏS responds to Public Address and Voice Alarm requirements as stated in EN54-16, ISO 7240-16 and BS5839/8, with specific attributes for compliance in large installations.

CD-TOUCH is available in two different versions with identical hardware and functionality functions, the firmware is different with different systems.

- **CD-TOUCHAS**: Used with IDA8 and ECS system
- **CD-TOUCH**: Used with DIVA system

FEATURES

- Wall-mount metal enclosure with lockable cover
- Secured CAT5/6 link to controllers and slaves
- Monitoring of microphone capsule
- Monitoring loudspeaker
- 5" full colour touch-screen, 800x480 pixels
- 14 pages of 12 buttons
- Power, fault and evac LEDS
- Display system status on LCD panel
- EN54-16 certified

CONTROLS AND INDICATORS

- 5" full color touch-screen, 800 x 480 pixels
- Three LED status indicators
- Three hardware function keys-buttons
- Fireman microphone (push to talk)

INTERCONNECTIONS

- **Back**
  - RS485 for CAT5/6 connection
  - 24 VDC power input (if no PoE)

PARTS INCLUDED

Quantities	Components
1	CD-TOUCHAS/CD-TOUCH
1	CAT5 cable, 1m

ELECTRICAL

- Mains power supply
  - Voltage: 18 ~ 26 VDC
  - Power consumption: 250 mA

AUDIO CHARACTERISTICS

- Frequency response: -3 dB @ 200 Hz to 8 kHz
- THD: < 1% @ 1 kHz
- Max output level: 6 dBu
- Noise gate threshold: -84 dBu ~ –24 dBu
- Attack time: 8 ms
- Release time: 100 ms
- Output impedance: 100 ohm
- Monitoring speaker
  - Impedance: 4 ohm
  - Output power: 1W @ 1 kHz
  - Frequency response: -3 dB @ 200 to 20 kHz
- System connection
  - Cable type/length: CAT5 (FTP)/100 m (max.)

MECHANICAL

- Dimensions (W x H x D): 206 x 397 x 127 mm (8.1 x 15.6 x 5 inch)
- Weight: 4.4 kg (9.7 lbs)
- Colour: RAL7016

ENVIRONMENTAL

- Operating temperature: -5 ºC ~ +55 ºC (+23 ºF ~ +131 ºF)
- Storage temperature: -40 ºC ~ +70 ºC (-40 ºF ~ +158 ºF)
- Relative humidity: 20 % to 95 %
- Air pressure: 600 to 1100 hPa
- Heat dissipation: 20 BTU/hr

CD-8 / CD-16 / CD-8AS / CD-16AS

Wall-Mount Monitored Paging Console

CD-8 / CD-8AS

CD-16 / CD-16AS

The CD paging console is a remote paging interface with access level 2 protection in compliance with EN54-16. It serves up to eight individual zones with an all-call button. Zone selection buttons and fireman microphone are encased in a heavy-duty IP30 wall-mount metal box with a lockable door.

The CD console use the same architecture as the PPM-AS/PSM paging console, a junction box embedded into the enclosure multiple units by daisy-chaining wiring (only the first console in the chain is under monitored). The maximum distance between units is up to 100M. The zone buttons of CD represent a single zone or group of zones and can be easily programmed through the system GUI software using "drag and drop" function. The Push-To-Talk button can be programmed for PTT or latching mode. The status LEDs including power, evac and fault which show the status of all the zone are also provided with.

The CD is powered over RS485 via CAT5/6 (FTP/STP), however if power is not available over RS485, it can be locally powered by using a 24VDC supply.

There are two versions of the CD paging console with identical hardware and functions, the firmware is different with different systems.

- **CD8-AS/CD16-AS**: Used with IDA8 and ECS system (support to daisy-chain up to 10 CD units via PDC port and external power supply should be used on every third unit).
- **CD-8/CD-16**: Used with DIVA system (support to daisy-chain up to 1 CD unit and only the first unit is being monitored. An external power supply should be used on every third unit in the chain).

FEATURES

- Wall-mount enclosure
- Secured CAT5/6 link to controllers and slaves
- Monitoring of microphone capsule
- 8/16 zone selection buttons
- All-call button
- LED test button
- Power LED, evac LED, status and fault LED
- EN54-16 certified

CD-8 / CD-16 / CD-8AS / CD-16AS

Technical Specifications

CONTROLS AND INDICATORS
- Three LED status indicators
- Activity indicators
- Zone selection buttons
- LED test button
- Fireman microphone (push to talk)

INTERCONNECTIONS
- **Rear**
  - RJ45 for CAT5/6 connection

CERTIFICATIONS AND APPROVALS

Europe	Voice Alarm	EN54-16 certified 2012
		CE-0359
		according to EN50130-4

PARTS INCLUDED

Quantities	Components
1	CD-8/CD-16/CD-8AS/CD-16AS
1	CAT5 cable, 10 pin, 1.5m

ELECTRICAL
- DC/battery power
  - Voltage: 18 ~ 26 VDC
  - Power consumption
    - CD-8/CD-8AS: 120 mA
    - CD-16/CD-16AS: 150 mA

AUDIO CHARACTERISTICS
- Frequency response: -3 dB @ 100 Hz to 18 kHz
- THD: < 1% @ 1 kHz
- Max output level: 6 dBu
- Noise gate threshold: -84 dBu ~ -24 dBu
- Attack time: 8 ms
- Release time: 100 ms
- Output impedance: 100 ohm
- Monitoring speaker
  - Impedance: 4 ohm
  - Output power: 1W @ 1 kHz
  - Frequency response: -3 dB @ 200 to 12 kHz
- System connection
  - Cable type: CAT5/6, 10 pin (FTP), RJ45
  - Length: 100m

MECHANICAL
- Dimensions (W x H x D)
  - CD-8/CD-8AS: 320 x 190 x 130 mm (12.6 x 7.5 x 5.1 inch)
  - CD-16/CD-16AS: 350 x 130 x 130 mm (13.4 x 5.1 x 5.1 inch)
- Weight
  - CD-8/CD-8AS: 3.6 kg (7.9 lbs)
  - CD-16/CD-16AS: 4.7 kg (10.4 lbs)
- Color: RAL7016

ENVIRONMENTAL
- Operating temperature: -5 ºC ~ +55 ºC (+23 ºF ~ +131 ºF)
- Storage temperature: -40 ºC ~ +70 ºC (-40 ºF ~ +158 ºF)
- Relative humidity: 20 % to 95 %
- Air pressure: 600 to 1100 hPa
- IP rating: 30
- Heat dissipation
  - CD-8/CD-8AS: 10 BTU/hr
  - CD-16/CD-16AS: 12 BTU/hr

CE 12
0359-CDP-0177
0359-CDP-0140

CDPM

Wall-Mount Monitored Paging Console

The CDPM paging console is a wall-mount cabinet remote with access level 2 protection in compliance with EN54-16. The CDPM paging console interconnects over a dedicated RS485 for power, audio and data transmission. It can connect up to 100m over CAT5/6 cable via daisy-chain wiring.

The CDPM has 2 channels of music input. By pressing the button for selection, the two LEDs shall light up and activate the music channel. The unit comprises of 24 zone buttons with fireman microphone in a metal surface-mount box. It provides robust IP-30 protection. Each ATEÏS audio processor is capable to support up to 31 CDPM units per RS485 port in master/slave configuration.

The control buttons represent a single zone or a group of zones. All buttons can be programmed with drag & drop features from ATEÏS Studio software, The PTT button can be programmed for Push To Talk function or for latching mode.

The unit offers "Hold" and "Busy" for zone buttons and these features allow an easy indication of selection/busy signals. In addition, to meet the compliance with EN54-16, the power, fault and evac LEDs are also provided with.

Additional RCA connectors with selection buttons support local audio injection for commercial usage.

CONTROLS AND INDICATORS

- Fireman microphone
- Power/music active/talk/all call/release/fault/busy/hold/evac/indicator
- Talk/music selection/all call/release button
- Monitoring speaker
- 2 channels of music input
- Event select key

INTERCONNECTIONS

- **Back**
  - RS485 for CAT5/6 connection

PARTS INCLUDED

Quantities	Components
1	CDPM-XX
1	Junction Box
1	CAT5 cable, 10 pin, 1m

ELECTRICAL

- Mains power supply
  - Voltage: 18 ~ 26VDC
  - Power consumption: 200 mA

AUDIO CHARACTERISTICS

- Frequency response: -3 dB @ 200 Hz to 20 kHz
- THD: < 1% @ 1 kHz
- Max output level: 6 dBu
- Noise gate threshold: -84 dBu ~ -24 dBu
- Attack time: 8 ms
- Release time: 100 ms
- Output impedance: 100 ohm
- System connection
  - Cable type: CAT5/6, 10 pin (FTP)
  - Cable length: 100m (max.)
- Monitoring speaker
  - Impedance: 8 ohm
  - Output power: 1W @ 1 kHz
  - Frequency response: -3 dB @ 200 to 20 kHz

MECHANICAL

- Dimensions (W x H x D): 483 x 220 x 68 mm (19 x 8.7 x 2.7 inch)
- Weight: 3.9 kg (8.6 lbs)
- Colour: RAL7016

ENVIRONMENTAL

- Operating temperature: -5 °C ~ +55 °C (+23 °F ~ +131 °F)
- Storage temperature: -40 °C ~ +70 °C (-40 °F ~ +158 °F)
- Relative humidity: 20 % to 95 %
- Air pressure: 600 to 1100 hPa
- IP rating: 30
- Heat dissipation: 16 BTU/hr

PCP

Wall-Mount Monitored Paging Console

The PCP paging console is a wall-mount heavy duty remote with access level 2 protection in compliance with EN54-16. PCP paging console interconnects over a dedicated RS485 for power, audio and data transmission. It can connect up to 100m over CAT5/6 cable via daisy-chain wiring.

The unit comprises of 16 zone buttons with fireman microphone in a metal ssurface-mount box. It provides robust IP-30 protection. Each ATEÏS audio processor is capable to support up to 31 PCP units per RS485 port in master/slave configuration.

The control buttons represent a single zone or a group of zones. All buttons can be programmed with drag & drop features from ATEÏS Studio software, The PTT button can be programmed for Push To Talk function or latching mode.

The unit offers "Hold" and "Busy" for zone buttons and these features allow an easy indication of selection/busy signals. In addition, to meet the compliance with EN54-16, the power, fault and evac LEDs are also provided with.

CONTROLS AND INDICATORS

- A telephone styled microphone
- Fault/evac/power/talk/hold/all call/release/busy indicator
- All call/release/talk button
- Microphone connector
- Event select key

INTERCONNECTIONS

- **Back**
  - RS485 for CAT5/6 connection

PARTS INCLUDED

Quantities	Components
1	PCP-XX
1	Junction Box
1	CAT5 cable, 10pin, 1m

ELECTRICAL

- Mains power supply
  - Voltage: 18 ~ 26VDC
  - Power consumption: 250 mA

AUDIO CHARACTERISTICS

- Frequency response: -3 dB @ 200 Hz to 20 kHz
- THD: < 1% @ 1 kHz
- Max output level: 6 dBu
- Noise gate threshold: -84 dBu ~ –24 dBu
- Attack time: 8 ms
- Release time: 100 ms
- Output impedance: 100 ohm
- Monitoring speaker
  - Impedance: 8 ohm
  - Output power: 1W @ 1 kHz
  - Frequency response: -3 dB @ 200 to 20 kHz
- System connection
  - Cable type: CAT5/6, 10 pin (FTP)
  - Cable length: 100m (max.)

MECHANICAL

- Dimensions (W x H x D): 346 x 220 x 128 mm (13.6 x 8.7 x 5 inch)
- Weight: 3 kg (6.6 lbs)
- Colour: RAL7016

ENVIRONMENTAL

- Operating temperature: -5 ºC ~ +55 ºC (+23 ºF ~ +131 ºF)
- Storage temperature: -40 ºC ~ +70 ºC (-40 ºF ~ +158 ºF)
- Relative humidity: 20 % to 95 %
- Air pressure: 600 to 1100 hPa
- IP rating: 30
- Heat dissipation: 12 BTU/hr

URC-150AS / URC-200AS

Programmable Remote Controller

URC-150AS

URC-200AS

- **URC-150AS**: Programmable Remote Controller

The URC-150AS can be fully programmed via ATEÏS Studio software to adjust the settings such as level, mute, master preset, sub preset, source selection etc.. It's equipped with an OLED panel for displaying information of status or parameters, plus two buttons [EXIT] and [BACK] and a rotary knob, providing an elegant and cost-effective solution. Up to 32 URC-150/URC-150AS units can be connected with a max. distance of 1,000m by using the junction box, providing with a longer distance from the audio processor.

- **URC-200AS**: Ethernet Universal Programmable Remote Controller

The URC-200AS is a programmable remote controller (TCP/IP) for IDA8 and Terracom system. It is powered over IP and integrates with the current demands for room controllers such as light, curtains, sound and video control. The full color display is easy to read and has a low-power consumption.

URC-150AS

ELECTRIAL

- DC power input: 24 VDC/20 mA

NETWORK

- Maximum distance: 1000m via twisted two pair shielded cable (RS485 protocol)
- Maximum units: 32

MECHANICAL

- Display: Monochrome
- Pixels: 128 x 64 pixels
- Pixels pitch: 0.274 x 0.274 mm
- OLED active area: 35 x 18 mm
- Dimension: 84 x 84 x 25.6 mm
- Weight: 280g

URC-200AS

ELECTRIAL

- Power: 24 VDC or POE

MECHANICAL

- Screen size: 2" full color (resolution : 176 x 220 px)
- Function keys: 2
- Rotary switch: 1
- Dimensions (W x D x H): 140 x 107 x 34 mm (5-1/2" x 4-1/5" x 1-1/3")
- Weight: 0.35 kg
- Finish: RAL9010 in ABS

IN PROCESS EN54 16

DNM-485 / DNM-ENET

Digital Noise Sensing Microphone

DNM-485/DNM-ENET

The DNM-ENET is a digital noise sensing microphone, providing high sensitivity and omni-directional pick up pattern, ambient noise reduction (ANR) and auto gain control (AGC) based on the detected ambient noise and automatically adjusts the output level of loudspeaker to achieve the optimal intelligibility of sound. The DNM-ENET is powered by PoE (Power over Ethernet) via STP CAT5/6 cable (100m max.).

- **DNM-485**: RS485 type
- **DNM-ENET**: Ethernet type

INTERCONNECTIONS
- RJ45 for STP CAT5/6 cable via Ethernet port (max. 100M)
- RS485 port for 5.08 mm euro block (4 pin)

ELECTRICAL
- DNM-ENET: Powered by PoE (Conform IEEE 802.3af)
- Voltage: 18 ~ 30VDC (if no PoE available)

AUDIO CHARACTERISTICS
- Ambient noise measurement range: 55 dBA ~ 105 dBA

SYSTEM CONNECTION
- DNM-ENET: STP CAT cable (100m max)
- DNM-485: 5.08 mm euro block (4-pin)

CERTIFICATIONS AND APPROVALS

Europe	CE/EMI	EN55032: 2015 AC: 2016 Class A (In process)
Europe	CE/EMC	EN61000-3-2:2014 EN61000-3-3:2013 EN55020:2007/A11:2011 (In process)
Europe	CE/LVD	EN60065: 2014 (In process)

MECHANICAL
- Dimensions (Diameter x H): 105 x 130 mm (4.1 x 5.1 inch)
- Weight: 0.13 kg (0.28 lbs)
- Colour: RAL7035

ENVIRONMENTAL
- Operating temperature: -5 ºC ~ +55 ºC (+23 ºF ~ +131 ºF)
- Storage temperature: -40 ºC ~ +70 ºC (-40 ºF ~ +158 ºF)
- Relative humidity: 20 % to 95 %
- Air pressure: 600 to 1100 hPa
- IP rating: 30
- Heat dissipation: 20 BTU/hr

DIALER-DP / DIALER-DPWL

Wired Touch Dialpad/Wireless Dialpad with Transceiver

The DIALER-DP is a tabletop touch dialpad for IDA8, ECS or UAP controller (with installed telephone card). It can dial the calls by connecting to a standard t elephone set with land line phone.

With its user-friendly design interface, the DIALER-DP allows for easy-to-use calling via touch keys, store your most frequently called numbers (phone book), volume controls, mute, display device information, connection status and the current phone number information, password protection etc.. The DIALER-DP also includes simplified conference calling allowing up to three (3) parties to connect at one time.

The DIALER-DP is also available in a wireless version. By connecting the DIALER-DPWL wireless transceiver box to ECS or IDA8C controller, it allows the DIALER-DP free from extraneous connections and wiring. The DIALER-DP can be easily relocated to any location the user prefers and will remain stable with its weighted foundation. The sensitivity and durability of the touchpad buttons ensures a longer lifespan than other comparable units. All functions can be easily programmed with Drag & Drop features on Ateis Studio software and operated via software or DIALER-DP simultaneously.

INTERCONNECTIONS AND INDICATORS

- DIALER-DP
  - Front: Telephone keypad/function keypad/panel display/status LED/buzzer
  - Rear: RS485 for CAT5/6 connection (PED port), battery holder
- DIALER-DPWL
  - Front: Power, status LEDs
  - Rear: RS232, 24VDC connector

PARTS INCLUDED

Quantities	Components
1	DIALER-DP/DIALER-DPWL
1	CAT5 cable, 500m

ELECTRICAL

- Power supply
  - DIALER-DP
    - Battery: 4 AAA batteries
    - Max power consumption: 600 mW
    - Standby mode: 420 mW
    - Average current: 480 mW
  - DIALER-DPWL
    - Max power consumption: 720 mW
    - Standby mode: 480 mW

PERFORMANCE

- LCD
  - Panel display: 128 x 32 pixels monochrome (white)
  - Number of characters: 16 characters x 2 line
- Buzzer sound: >85 dBA @100 mm (DIALER-DP)
- System connection
  - DIALER-DP
    - Max. distance: 500m (between ECS/IDA8 and DIALER-DP/DIALER-DPWL)
    - Cable type: STP CAT5/6
  - DIALER-DPWL
    - Max. distance: 15m (between DIALER-DP and DIALER-DPWL)

MECHANICAL

- Dimensions (W x H x D)
  - DIALER-DP: 255 x 66 x 108 mm (13.6 x 8.7 x 5 inch)
  - DIALER-DPWL: 67 x 30 x 100mm (2.6 x 1.2 x 3.9 inch)
- Weight
  - DIALER-DP: 0.5 kg (1.1 lbs)
  - DIALER-DPWL: 0.1 kg (0.2 lbs)
- Colour: RAL7016

ENVIRONMENTAL

- Operating temperature: -5 ºC ~ +55 ºC (+23 ºF ~ +131 ºF)
- Storage temperature: -40 ºC ~ +70 ºC (-40 ºF ~ +158 ºF)
- Relative humidity: 20% to 95%
- Air pressure: 600 to 1100 hPa
- IP rating: 30

URGP-32I2O / URGP-16I16O

Alart Input Interface for IDA8 System

The URGP is a contact interface extension unit for IDA8 system.

The URGP-32I2O/URGP-16I16O provide 32/16 additional alarm inputs, plus additional 16 outputs for URGP-16I16O. Each input is monitored and can be programmed to trigger a digital audio message into a specific zone or group of zones. The URGP is connected to the system units through RS232/RS485 monitored serial link.

FEATURES

- Desktop enclosure
- Secured RS232/RS485 link to controllers and slaves
- 16/32 alarm inputs
- Power, status and fault LEDs
- EN54-16 certified

INDICATORS

- **Front**
  - Evacuation active indicator
  - Fault indicator
  - Power indicator

INTERCONNECTIONS

- **Back**
  - RJ45
  - RS232

CERTIFICATIONS AND APPROVALS

Europe	Voice Alarm	EN54-16 certified 2012
		CE-0359
		according to EN50130-4

ELECTRICAL

- Mains power supply
  - Voltage: 18 ~ 26 VDC
  - Power consumption: 30 mA

PERFORMANCE

- Evacuation inputs
  - Contact mode: 5 VDC
  - Voltage mode: -6 dBu
  - Monitoring resistor: 4.7k ohm
- System connection
  - Cable type/length: CAT5/6, 100m (max.)

MECHANICAL

- Dimensions (W x H x D): 140 x 44 x 75 mm (5.5 x 1.7 x 3 inch)
- Weight: 0.5 kg (1.1 lbs)
- Colour: RAL7016

ENVIRONMENTAL

- Operating temperature: -5 ºC ~ +55 ºC (+23 ºF ~ +131 ºF)
- Storage temperature: -40 ºC ~ +70 ºC (-40 ºF ~ +158 ºF)
- Relative humidity: 20% to 95%
- Air pressure: 600 to 1100 hPa
- IP rating: 30

CE 12
0359-CDP-0177

List of Peripherals

Peripherals	Connection	Maximum units (per port)	Device
PSS-AS	PDC port	1	IDA8
PSS-G2	PSS/PSM port	1	DIVA
PSS-G2E	Ethernet	8	DIVA
PPM-IT5	Ethernet	1 (active over Eth.)	IDA8
PPM-AS	PDC port	32*	IDA8
PSM	PSS/PSM port	10*	DIVA
PSC	PDC port	32*	IDA8
CD-8/CD-8AS/CD-16/CD-16AS	PDC port (IDA8) PSS/PSM port (DIVA)	10*	IDA8/DIVA
CD-TOUCH/CD-TOUCHAS	PDC port (IDA8) PSS/PSM port (DIVA)	1	IDA8/DIVA
PCP/CDPM	PDC port	32*	IDA8
DIALER-DP/DIALER-DPWL	PDC port	1	IDA8
URC-150AS	PDC port	32*	IDA8
URC-200AS	Ethernet	Eth. Limit**	IDA8
DNM-485	PDC port	32*	IDA8
DNM-ENET	Ethernet	Eth. Limit**	IDA8
URGP-32I2O/URGP-16I16O	PDC port	1	IDA8

The devices which are connected to PDC port, PSS port and PSM port are powered over RS485 communication protocol.

* max. units: require to connect junction boxes and external power supply.

** Eth. limit: the max. number which can be assigned over the network.

Ordering Information

Touch Panel/Desktop Paging Consoles	
For IDA8	
PSS-AS	Programmable Paging Microphone Touch Panel RS485
PPM-IT5	Programmable Paging Microphone InTerCom (5" panel)
PPM-AS	Programmable Paging Microphone V2
PPM-ASWJB	Programmable Paging Microphone V2 (with Junction Box)
PSC	Programmable Paging Microphone
PSC-ASWJB	Programmable Paging Microphone (with Junction Box)
For DIVA	
PSS-G2	Programmable Paging Microphone Touch Panel RS485
PSS-G2E	Programmable Paging Microphone Touch Panel Ethernet
PSM	Programmable Paging Microphone
PSM 8WJB	Programmable Paging Microphone (with Junction Box)
Wall-Mount Paging Consoles	
For IDA8	
CD-16AS	Wall mount Paging Console 16zone w/JB for IDA8
CD-8AS	Wall mount Paging Console 8zone w/JB for IDA8
PCP	Paging Console Microphone
CDPM	Programmable Paging Microphone Touch Panel Ethernet
CD-TOUCHAS	Wall mounted programmable touch panel mic RS485
For DIVA	
CD-16	Wall mount Paging Console 16zone w/JB for DIVA
CD-8	Wall mount Paging Console 8zone w/JB for DIVA
CD-TOUCH	Wall mount Programmable Touch Panel Paging Mic
Accessories	
Programmable Remote Controller	
URC-150AS	Universal Remote Control
URC-200AS	Wall-mount with 2" TFT LCD Screen and IR receiver
Touch Dialpad	
DIALER-DP	Dialing Controller for ECS and IDA8 system
DIALER-DPWL	Wireless Transceiver
Control Input/Output Interface	
URGP-32I2O	UART GPIO with 32I2O relay contact and RS232/485
URGP-16I16O	UART GPIO with 16I16O relay contact and RS232/485
Noise Sensing Microphone	
DNM-485	DSP NS MIC RS485
DNM-ENET	DSP NS MIC Ethernet